HYPERTHERM®
A Hypertherm Associates Brand

Powermax45 SYNC®

Operator Manual

811470 – REVISION 2

ENGLISH

Register your new Hypertherm system

Benefits of registration

- ☑ **Safety:** Registration allows us to contact you in the unlikely event a safety or quality notification is required.
- ☑ **Education:** Registration gives you free access to online product training content via the Hypertherm Cutting Institute.
- ☑ **Confirmation of ownership:** Registration can serve as proof of purchase in case of an insurance loss.

Go to **www.hypertherm.com/registration** for easy and fast registration.

If you experience any problems with the product registration process, please contact registration@hypertherm.com.

For your records

Serial number: _____

Purchase date: _____

Distributor: _____

_____

_____

Maintenance notes: _____

_____

_____

_____

_____

Powermax, SYNC, SmartSYNC, FastConnect, and Hypertherm are trademarks of Hypertherm, Inc. and may be registered in the United States and other countries. All other trademarks are the property of their respective holders.

Environmental stewardship is one of Hypertherm's core values, and it is critical to our success and our customers' success. We are striving to reduce the environmental impact of everything we do. For more information: www.hypertherm.com/environment.

© 2024 Hypertherm, Inc.

Powermax45 SYNC

Operator Manual

811470
REVISION 2

ENGLISH
Original instructions

June 2024

Hypertherm, Inc.
Hanover, NH 03755 USA
www.hypertherm.com

Hypertherm, Inc.
21 Great Hollow Road, P.O. Box 5010
Hanover, NH 03755 USA
603-643-3441 Tel (Main Office)
603-643-5352 Fax (All Departments)
info@hypertherm.com (Main Office)
800-643-9878 Tel (Technical Service)
technical.service@hypertherm.com (Technical Service)
800-737-2978 Tel (Customer Service)
customer.service@hypertherm.com (Customer Service)

Hypertherm México, S.A. de C.V.
52 55 5681 8109 Tel
52 55 5681 7978 Tel
soporte.tecnico@hypertherm.com (Technical Service)

Hypertherm Plasmatechnik GmbH
Sophie-Scholl-Platz 5
63452 Hanau
Germany
00 800 33 24 97 37 Tel
00 800 49 73 73 29 Fax
31 (0) 165 596900 Tel (Technical Service)
00 800 4973 7843 Tel (Technical Service)
technicalservice.emeia@hypertherm.com (Technical Service)

Hypertherm (Singapore) Pte Ltd.
Solaris @ Kallang 164
164 Kallang Way #03-13
Singapore 349248, Republic of Singapore
65 6841 2489 Tel
65 6841 2490 Fax
marketing.asia@hypertherm.com (Marketing)
techsupportapac@hypertherm.com (Technical Service)

Hypertherm Japan Ltd.
Level 9, Edobori Center Building
2-1-1 Edobori, Nishi-ku
Osaka 550-0002 Japan
81 6 6225 1183 Tel
81 6 6225 1184 Fax
htjapan.info@hypertherm.com (Main Office)
techsupportapac@hypertherm.com (Technical Service)

Hypertherm Europe B.V.
Laan van Kopenhagen 100
3317 DM Dordrecht
Nederland
31 165 596907 Tel
31 165 596901 Fax
31 165 596908 Tel (Marketing)
31 (0) 165 596900 Tel (Technical Service)
00 800 4973 7843 Tel (Technical Service)
technicalservice.emeia@hypertherm.com (Technical Service)

Hypertherm (Shanghai) Trading Co., Ltd.
B301, 495 ShangZhong Road
Shanghai, 200231
PR China
86-21-80231122 Tel
86-21-80231120 Fax
86-21-80231128 Tel (Technical Service)
techsupport.china@hypertherm.com (Technical Service)

South America & Central America: Hypertherm Brasil Ltda.
Rua Bras Cubas, 231 – Jardim Maia
Guarulhos, SP – Brasil
CEP 07115-030
55 11 2409 2636 Tel
tecnico.sa@hypertherm.com (Technical Service)

Hypertherm Korea Branch
#3904. APEC-ro 17. Heaundae-gu. Busan.
Korea 48060
82 (0)51 747 0358 Tel
82 (0)51 701 0358 Fax
marketing.korea@hypertherm.com (Marketing)
techsupportapac@hypertherm.com (Technical Service)

Hypertherm Pty Limited
GPO Box 4836
Sydney NSW 2001, Australia
61 7 3103 1695 Tel
61 7 3219 9010 Fax
au.sales@hypertherm.com (Main Office)
techsupportapac@hypertherm.com (Technical Service)

Hypertherm (India) Thermal Cutting Pvt. Ltd
A-18 / B-1 Extension,
Mohan Co-Operative Industrial Estate,
Mathura Road, New Delhi 110044, India
91-11-40521201/ 2/ 3 Tel
91-11 40521204 Fax
htindia.info@hypertherm.com (Main Office)
technicalservice.emeia@hypertherm.com (Technical Service)

For training and education resources, go to the Hypertherm Cutting Institute (HCI) online at www.hypertherm.com/hci.

ENGLISH

WARNING! Before operating any Hypertherm equipment, read the safety instructions in your product's manual, the *Safety and Compliance Manual* (80669C), *Waterjet Safety and Compliance Manual* (80943C), and *Radio Frequency Warning Manual* (80945C). Failure to follow safety instructions can result in personal injury or in damage to equipment.

Copies of the manuals can come with the product in electronic and printed formats. Electronic copies are also on our website. Many manuals are available in multiple languages at www.hypertherm.com/docs.

BG (БЪЛГАРСКИ/BULGARIAN)

ПРЕДУПРЕЖДЕНИЕ! Преди да работите с което и да е оборудване Hypertherm, прочетете инструкциите за безопасност в ръководството на вашия продукт, „Инструкция за безопасност и съответствие“ (80669C), „Инструкция за безопасност и съответствие на Waterjet“ (80943C) и „Инструкция за предупреждение за радиочестота“ (80945C).

Продуктът може да е съпроводен от копия на ръководствата в електронен и в печатен формат. Тези в електронен формат са достъпни също на уебсайта ни. Много ръководства са налице на няколко езика на адрес www.hypertherm.com/docs.

CS (ČESKY/CZECH)

VAROVÁNÍ! Před uvedením jakéhokoli zařízení Hypertherm do provozu si přečtěte bezpečnostní pokyny v příručce k produktu a v *Manuálu pro bezpečnost a dodržování předpisů* (80669C), *Manuálu pro bezpečnost a dodržování předpisů při řezání vodním paprskem* (80943C) a *Manuálu varování ohledně rádiových frekvencí* (80945C).

Kopie příruček mohou být součástí dodávky produktu, a to v elektronické i tištěné formě. Elektronické kopie jsou k dispozici i na našich webových stránkách. Mnoho příruček je k dispozici v různých jazycích na stránce www.hypertherm.com/docs.

DA (DANSK/DANISH)

ADVARSEL! Inden Hypertherm udstyr tages i brug skal sikkerhedsinstruktionerne i produktets manual og i *Manual om sikkerhed og overholdelse af krav* (80669C), *Manual om sikkerhed og overholdelse af krav for vandstråleskæring* (80943C), og *Manual om radiofrekvensadvarsel* (80945C), gennemlæses.

Kopier af manualerne kan leveres med produktet i elektronisk og trykt format. Elektroniske kopier findes også på vores hjemmeside. Mange manualer er tilgængelige på flere sprog på www.hypertherm.com/docs.

DE (DEUTSCH/GERMAN)

WARNUNG! Bevor Sie ein Hypertherm-Gerät in Betrieb nehmen, lesen Sie bitte die Sicherheitsanweisungen in Ihrer Bedienungsanleitung, das *Handbuch für Sicherheit und Übereinstimmung* (80669C), das *Handbuch für Sicherheit und Compliance bei Wasserstrahl-Schneidanlagen* (80943C) und das *Handbuch für Hochfrequenz-Warnung* (80945C).

Bedienungsanleitungen und Handbücher können dem Gerät in elektronischer Form oder als Druckversion beiliegen. In elektronischer Form liegen sie auch auf unserer Website vor. Viele Handbücher stehen in verschiedenen Sprachen auf www.hypertherm.com/docs zur Verfügung.

ES (ESPAÑOL/SPANISH)

¡ADVERTENCIA! Antes de operar cualquier equipo Hypertherm, lea las instrucciones de seguridad del manual de su producto, del *Manual de seguridad y cumplimiento* (80669C), del *Manual de seguridad y cumplimiento en corte con chorro de agua* (80943C) y del *Manual de advertencias de radiofrecuencia* (80945C).

El producto puede incluir copias de los manuales en formato digital e impreso. Las copias digitales también están en nuestra página web. Hay diversos manuales disponibles en varios idiomas en www.hypertherm.com/docs.

ET (EESTI/ESTONIAN)

HOIATUS! Enne Hyperthermi mis tahes seadme kasutamist lugege läbi toote kasutusjuhendis olevad ohutusjuhised ning *Ohutus- ja vastavusjuhend* (80669C), *Veejoa ohutuse ja vastavuse juhend* (80943C) ja *Raadiosageduse hoiatusjuhend* (80945C). Ohutusjuhiste eiramine võib põhjustada vigastusi ja kahjustada seadmeid.

Juhiste koopiad võivad tootega kaasas olla elektrooniliselt või trükituna. Elektroonilised koopiad on saadaval ka meie veebilehel. Paljud kasutusjuhendid on erinevates keeltes saadaval veebilehel www.hypertherm.com/docs.

FI (SUOMI/FINNISH)

VAROITUS! Ennen minkään Hypertherm-laitteen käyttöä lue tuotteen käyttöoppaassa olevat turvallisuusohjeet, *turvallisuuden ja vaatimustenmukaisuuden käsikirja* (80669C), vesileikkauksen *turvallisuuden ja vaatimustenmukaisuuden käsikirja* (80943C) ja *radiotaajuusvaroitusten käsikirja* (80945C).

Käyttöoppaiden kopiot voivat olla tuotteen mukana sähköisessä ja tulostetussa muodossa. Sähköiset kopiot ovat myös verkkosivustollamme. Monet käyttöoppaat ovat myös saatavissa useilla kielillä www.hypertherm.com/docs.

FR (FRANÇAIS/FRENCH)

AVERTISSEMENT! Avant d'utiliser tout équipement Hypertherm, lire les consignes de sécurité du manuel de votre produit, du *Manuel de sécurité et de conformité* (80669C), du *Manuel de sécurité et de conformité du jet d'eau* (80943C) et du *Manuel d'avertissement relatif aux radiofréqunces* (80945C).

Les exemplaires des manuels qui accompagnent le produit peuvent être sous forme électronique ou papier. Les manuels sous forme électronique se trouvent également sur notre site Internet. Plusieurs manuels sont offerts en plusieurs langues à www.hypertherm.com/docs.

GR (ΕΛΛΗΝΙΚΑ/GREEK)

ΠΡΟΕΙΔΟΠΟΙΗΣΗ! Πριν θέσετε σε λειτουργία οποιονδήποτε εξοπλισμό της Hypertherm, διαβάστε τις οδηγίες ασφαλείας στο εγχειρίδιο του προϊόντος και στο *εγχειρίδιο ασφάλειας και συμμόρφωσης* (80669C), στο *εγχειρίδιο ασφάλειας και συμμόρφωσης του waterjet* (80943C) και στο *εγχειρίδιο προειδοποιήσεων για τις ραδιοσυχνότητες* (80945C).

Το προϊόν μπορεί να συνοδεύεται από αντίγραφα των εγχειριδίων σε ηλεκτρονική και έντυπη μορφή. Τα ηλεκτρονικά αντίγραφα υπάρχουν επίσης στον ιστότοπό μας. Πολλά εγχειρίδια είναι διαθέσιμα σε διάφορες γλώσσες στο www.hypertherm.com/docs.

HU (MAGYAR/HUNGARIAN)

VIGYÁZAT! Mielőtt bármilyen Hypertherm berendezést üzemeltetne, olvassa el a biztonsági információkat a termék kézikönyvében, a *Biztonsági és szabálykövetési kézikönyvben* (80669C), a *Vízsugaras biztonsági és szabálykövetési kézikönyvben* (80943C) és a *Rádiófrekvenciás figyelmeztetéseket tartalmazó kézikönyvben* (80945C).

A termékhez a kézikönyv példányai elektronikus és nyomtatott formában is mellékelve lehetnek. Az elektronikus példányok webhelyünkön is megtalálhatók. Számos kézikönyv áll rendelkezésre több nyelven a www.hypertherm.com/docs weboldalon.

ID (BAHASA INDONESIA/INDONESIAN)

PERINGATAN! Sebelum mengoperasikan peralatan Hypertherm, bacalah petunjuk keselamatan dalam manual produk Anda, *Manual Keselamatan dan Kepatuhan* (80669C), *Manual Keselamatan dan Kepatuhan Jet Air* (80943C), dan *Manual Peringatan Frekuensi Radio* (80945C). Kegagalan mengikuti petunjuk keselamatan dapat menyebabkan cedera pribadi atau kerusakan pada peralatan.

Produk mungkin disertai salinan manual atau petunjuk dalam format elektronik maupun cetak. Salinan elektronik juga tersedia di situs web kami. Berbagai manual tersedia dalam beberapa bahasa di www.hypertherm.com/docs.

IT (ITALIANO/ITALIAN)

AVVERTENZA! Prima di usare un'attrezzatura Hypertherm, leggere le istruzioni sulla sicurezza nel manuale del prodotto, nel *Manuale sulla sicurezza e la conformità* (80669C), nel *Manuale sulla sicurezza e la conformità Waterjet* (80943C) e nel *Manuale di avvertenze sulla radiofrequenza* (80945C).

Copie del manuale possono accompagnare il prodotto in formato cartaceo o elettronico. Le copie elettroniche sono disponibili anche sul nostro sito web. Molti manuali sono disponibili in diverse lingue all'indirizzo www.hypertherm.com/docs.

JA (日本語/JAPANESE)

警告！Hypertherm 機器を操作する前に、この製品説明書にある安全情報、「安全とコンプライアンスマニュアル」(80669C)、「ウォータージェットの安全とコンプライアンス」(80943C)、「高周波警告」(80945C) をお読みください。

説明書のコピーは、電子フォーマット、または印刷物として製品に同梱されています。電子コピーは当社ウェブサイトにも掲載されています。説明書の多くは www.hypertherm.com/docs にて複数の言語でご用意しています。

KO (한국어/KOREAN)

경고! Hypertherm 장비를 사용하기 전에 제품 설명서와 안전 및 규정 준수 설명서(80669C), 워터젯 안전 및 규정 준수 설명서(80943C) 그리고 무선 주파수 경고 설명서(80945C)에 나와 있는 안전 지침을 읽으십시오.

전자 형식과 인쇄된 형식으로 설명서 사본이 제품과 함께 제공될 수 있습니다. 전자 사본도 Hypertherm 웹사이트에서 보실 수 있으며 설명서 사본은 www.hypertherm.com/docs 에서 여러 언어로 제공됩니다.

NE (NEDERLANDS/DUTCH)

WAARSCHUWING! Lees voordat u Hypertherm-apparatuur gebruikt de veiligheidsinstructies in de producthandleiding, in de *Veiligheids- en nalevingshandleiding* (80669C) in de *Veiligheids- en nalevingshandleiding voor waterstralen* (80943C) en in de *Waarschuwingshandleiding radiofrequentie* (80945C).

De handleidingen kunnen in elektronische en gedrukte vorm met het product worden meegeleverd. Elektronische versies zijn ook beschikbaar op onze website. Veel handleidingen zijn in meerdere talen beschikbaar via www.hypertherm.com/docs.

NO (NORSK/NORWEGIAN)

ADVARSEL! Før du bruker noe Hypertherm-utstyr, må du lese sikkerhetsinstruksjonene i produktets håndbok, *håndboken om sikkerhet og samsvar* (80669C), *håndboken om vannjet sikkerhet og samsvar* (80943C), og *håndboken om radiofrekvensadvarsler* (80945C).

Eksemplarer av håndbøkene kan følge med produktet i elektronisk og trykt form. Elektroniske eksemplarer finnes også på nettstedet vårt. Mange håndbøker er tilgjengelig i flere språk på www.hypertherm.com/docs.

PL (POLSKI/POLISH)

OSTRZEŻENIE! Przed rozpoczęciem obsługi jakiegokolwiek systemu firmy Hypertherm należy się zapoznać z instrukcjami bezpieczeństwa zamieszczonymi w podręczniku produktu, w *podręczniku bezpieczeństwa i zgodności* (80669C), *podręczniku bezpieczeństwa i zgodności systemów strumienia wody* (80943C) oraz *podręczniku z ostrzeżeniem o częstotliwości radiowej* (80945C).

Do produktu mogą być dołączone podręczniki użytkownika w formie elektronicznej i drukowanej. Kopie elektroniczne znajdują się również w naszej witrynie internetowej. Wiele podręczników jest dostępnych w różnych językach pod adresem www.hypertherm.com/docs.

PT (PORTUGUÊS/PORTUGUESE)

ADVERTÊNCIA! Antes de operar qualquer equipamento Hypertherm, leia as instruções de segurança no manual do seu produto, no *Manual de Segurança e de Conformidade* (80669C), no *Manual de Segurança e de Conformidade do Waterjet* (80943C) e no *Manual de Advertência de radiofrequência* (80945C).

Cópias dos manuais podem vir com o produto nos formatos eletrônico e impresso. Cópias eletrônicas também são encontradas em nosso website. Muitos manuais estão disponíveis em vários idiomas em www.hypertherm.com/docs.

RO (ROMÂNĂ/ROMANIAN)

AVERTIZARE! Înainte de utilizarea oricărui echipament Hypertherm, citiți instrucțiunile de siguranță din manualul produsului, *manualul de siguranță și conformitate* (80669C), *manualul de siguranță și conformitate Waterjet* (80943C) și din *manualul de avertizare privind radiofrecvența* (80945C).

Produsul poate fi însoțit de copii ale manualelor în format tipărit și electronic. Exemplarele electronice sunt disponibile și pe site-ul nostru web. Numeroase manuale sunt disponibile în mai mult limbi la adresa: www.hypertherm.com/docs.

RU (РУССКИЙ/RUSSIAN)

БЕРЕГИСЬ! Перед работой с любым оборудованием Hypertherm ознакомьтесь с инструкциями по безопасности, представленными в руководстве, которое поставляется вместе с продуктом, в *Руководстве по безопасности и соответствию* (80669C), в *Руководстве по безопасности и соответствию для водоструйной резки* (80943C) и *Руководстве по предупреждению о радиочастотном излучении* (80945C).

Копии руководств, которые поставляются вместе с продуктом, могут быть представлены в электронном и бумажном виде. Электронные копии также доступны на нашем веб-сайте. Целый ряд руководств доступны на нескольких языках по ссылке www.hypertherm.com/docs.

SK (SLOVENČINA/SLOVAK)

VÝSTRAHA! Pred použitím akéhokoľvek zariadenia od spoločnosti Hypertherm si prečítajte bezpečnostné pokyny v návode na obsluhu vášho zariadenia a v *Manuáli o bezpečnosti a súlade s normami* (80669C), *Manuáli o bezpečnosti a súlade s normami pre systém rezania vodou* (80943C) a v *Manuáli s informáciami o rádiofrekvencii* (80945C).

Návod na obsluhu sa dodáva spolu s produktom v elektronickej a tlačenej podobe. Jeho elektronický formát je dostupný aj na našej webovej stránke. Mnohé z návodov na obsluhu sú dostupné vo viacjazyčnej mutácii na stránke www.hypertherm.com/docs.

SL (SLOVENŠČINA/SLOVENIAN)

OPOZORILO! Pred uporabo katerekoli Hyperthermove opreme preberite varnostna navodila v priročniku vašega izdelka, v *Priročniku za varnost in skladnost* (80669C), v *Priročniku za varnost in skladnost sistemov rezanja z vodnim curkom* (80943C) in v *Priročniku Opozorilo o radijskih frekvencah* (80945C).

Izvodi priročnikov so lahko izdelku priloženi v elektronski in tiskani obliki. Elektronski izvodi so na voljo tudi na našem spletnem mestu. Številni priročniki so na voljo v različnih jezikih na naslovu www.hypertherm.com/docs.

SR (SRPSKI/SERBIAN)

UPOZORENJE! Pre rukovanja bilo kojom Hyperthermovom opremom pročitajte uputstva o bezbednosti u svom priručniku za proizvod, *Priručniku o bezbednosti i usaglašenosti* (80669C), *Priručniku o bezbednosti i usaglašenosti Waterjet tehnologije* (80943C) i *Priručniku sa upozorenjem o radio-frekvenciji* (80945C).

Уз производ се испоручују копије приручника у електронском или штампаном формату. Електронске копије су такође доступне на нашем веб-сајту. Многи приручници су доступни на више језика на адреси www.hypertherm.com/docs.

SV (SVENSKA/SWEDISH)

VARNING! Läs häftet säkerhetsinformationen i din produkts *säkerhets- och efterlevnadsmanual* (80669C), *säkerhets- och efterlevnadsmanualen för Waterjet* (80943C) och *varningsmanualen för radiofrekvenser* (80945C) för viktig säkerhetsinformation innan du använder eller underhåller Hypertherm-utrustning.

Kopior av manualerna kan medfölja produkten i elektroniskt och tryckt format. Elektroniska kopior finns också på vår webbplats. Många manualer finns på flera språk på www.hypertherm.com/docs.

TH (ภาษาไทย/THAI)

คำเตือน! ก่อนการใช้งานอุปกรณ์ของ Hypertherm ทั้งหมด โปรดอ่านคำแนะนำด้านความปลอดภัยในคู่มือการใช้สินค้า คู่มือด้านความปลอดภัยและการปฏิบัติตาม (80669C), คู่มือด้านความปลอดภัยและการปฏิบัติตามสำหรับการใช้หัวตัดระบบวอเตอร์เจ็ต (80943C) และ คู่มือคำเตือนเกี่ยวกับความถี่วิทยุ (80945C) การไม่ปฏิบัติตามคำแนะนำด้านความปลอดภัยอาจส่งผลให้เกิดการบาดเจ็บหรือเกิดความเสียหายต่ออุปกรณ์

สำเนาคู่มือทั้งในรูปแบบอิเล็กทรอนิกส์และแบบสิ่งพิมพ์จะถูกแนบมาพร้อมกับผลิตภัณฑ์ สำเนาคู่มือในรูปแบบอิเล็กทรอนิกส์ของผลิตภัณฑ์และสำเนาคู่มือต่าง ๆ ในหลากหลายภาษานั้นยังมีให้บริการบนเว็บไซต์ www.hypertherm.com/docs ของเราอีกด้วย

TR (TÜRKÇE/TURKISH)

UYARI! Bir Hypertherm ekipmanını çalıştırmadan önce, ürününüzün kullanım kılavuzunda, *Güvenlik ve Uyumluluk Kılavuzu'nda* (80669C), *Su Jeti Güvenlik ve Uyumluluk Kılavuzu'nda* (80943C) ve *Radyo Frekansı Uyarısı Kılavuzu'nda* (80945C) yer alan güvenlik talimatlarını okuyun.

Kılavuzların kopyaları, elektronik ve basılı formatta ürünle birlikte verilebilir. Elektronik kopyalar web sitemizde de yer alır. Kılavuzların birçoğu www.hypertherm.com/docs adresinde birçok dilde mevcuttur.

VI (TIẾNG VIỆT/VIETNAMESE)

CẢNH BÁO! Trước khi vận hành bất kỳ thiết bị Hypertherm nào, hãy đọc các hướng dẫn an toàn trong hướng dẫn sử dụng sản phẩm của bạn, *Sổ tay An toàn và Tuân thủ* (80669C), *Sổ tay An toàn và Tuân thủ Tia nước* (80943C), và *Hướng dẫn Cảnh báo Tần số Vô tuyến* (80945C). Không tuân thủ các hướng dẫn an toàn có thể dẫn đến thương tích cá nhân hoặc hư hỏng thiết bị.

Bản sao của sổ tay có thể đi kèm với sản phẩm ở định dạng điện tử và in. Bản điện tử cũng có trên trang web của chúng tôi. Nhiều sổ tay có sẵn bằng nhiều ngôn ngữ tại www.hypertherm.com/docs .

ZH-CN (简 体中文/CHINESE SIMPLIFIED)

警告！ 在操作任何海宝设备之前，请阅读产品手册、《安全和法规遵守手册》(80669C)、《水射流安全和法规遵守手册》 (80943C) 以及 《射频警告手册》(80945C) 中的安全操作说明。

随产品提供的手册可提供电子版和印刷版两种格式。电子版本同时也在我们的网站上提供。很多手册有多种语言版本，详见 www.hypertherm.com/docs.

ZH-TW (繁 體中文/CHINESE TRADITIONAL)

警告！在操作任何 Hypertherm 設備前，請先閱讀您產品手冊內的安全指示，包括 《安全和法規遵從手冊》(80669C) 、《水刀安全和法規遵從手冊》（80943C），以及 《無線電頻率警示訊號手冊》（80945C）。

電子版和印刷版手冊複本可能隨產品附上。您也可以前往我們的網站下載電子版手冊。我們的網站上還以多種語言形式提供多種手冊，請造訪 www.hypertherm.com/docs 。

Contents

Electromagnetic Compatibility (EMC) 11

Warranty 13

1 Where to Find Information 15

2 Install and Set Up the Plasma Power Supply 17

Make sure that you have all the system components 18
What to do if components are missing or damaged 19
Hypertherm plasma power supply ratings 19
Find system specifications on the data plate 21
Find the part number for your system 22
Critical raw materials 22
Symbols and marks 23
International Electrotechnical Commission (IEC) symbols 24
Acoustical noise levels 25
Radio frequency identification (RFID) specifications 25
Cutting specifications 25
Recommended cut capacity 25
Pierce capacity 25
Maximum cut speeds (mild steel) 26
Put the plasma power supply into the correct position 27
Plasma power supply dimensions and weight 29
Work lead weights 29
Connect to electrical power 30
Requirements for grounding 31
Rated output (cutting power) of the plasma power supply 31
Voltage configurations 31
CSA/CE/CCC 200 V – 240 V (1-phase) 32
CSA 208 V (1-phase) 32
CCC 220 V (1-phase) 32

CE 230 V (1-phase) 32
CCC 380 V (3-phase) 33
CE 400 V (3-phase) 33
CSA 480 V (3-phase) 33
Decrease output current and arc stretch for lower rated electrical service 34
Prepare the power cord and plug 35
CSA systems 35
CE/CCC systems 35
Extension cord recommendations 36
Use a generator (if necessary) 36
Adapter for 4-wire 1-phase connections (CSA 1-phase models only) 37
Connect the gas supply 37
Gas supply source 39
High-pressure gas cylinders 40
Maximum inlet pressure 41
Minimum inlet pressure and gas flow rate 41
Add more gas filtration 41

3 Operate the Plasma System 45

Step 1 – Make sure that the plasma power supply is connected to power and gas 45
Step 2 – Connect the torch lead 46
Step 3 – Connect the work lead and work clamp 47
Work lead 47
Work clamp 48
Step 4 – Install the cartridge 48
Lock the torch 49
Install the cartridge 50
Cut expanded metal 50
Step 5 – Set the power switch to ON (I) 51
Step 6 – Unlock the SmartSYNC torch 52
Warning puffs of air 52
Change a cartridge 53
LED behavior during a cartridge change 53
Step 7 – Use the SmartSYNC torch 54
Use the hand torch 54
What occurs during and after cutting 54
Temperature control 54
Controls and indicators on the plasma power supply 55
Cutting and gouging controls 55
Indicator LEDs 56
Controls and indicators on the hand torch 57

Adjust the operating settings manually 57
Adjust the output current manually 58
Adjust the output current from the hand torch 58
Adjust the gas pressure manually 59
Go back to automatic settings mode 60
Monitor cartridge data 61
Monitor data for individual cartridges 61
Prevent overheating 61
Decrease arc stretch 62

4 Cut and Mark with the Hand Torch 63

About the hand torch 64
Select the correct cutting cartridge 65
Prepare to fire the torch 66
Start a cut from the edge of the workpiece 68
Pierce a workpiece 70
Guidelines for hand torch cutting 72
Mark with the hand torch 72
Marking process guidelines 72
Get the most out of your cartridges 73
Signs that a cartridge is near end-of-life 74
Hand torch components, dimensions, and weights 75
Components 75
Dimensions 76
75° torch 76
15° torch 76
Weights 76

5 Gouge with the Hand Torch 77

Gouge with the hand torch 77
Prepare to fire the torch 78
Start a gouge at an angle to the workpiece 80
Guidelines for hand torch gouging 82
Change the output current (A) of the plasma power supply 82
Change the angle of the torch to the workpiece 82
Change the turn of the torch 83
Change the torch-to-work standoff / arc stretch 83
Change the speed of the torch 84

6 Troubleshoot Common Problems 85

Start here: troubleshooting checklist 86
Common problems and solutions 89
Cold restarts and quick restarts 90
Do a cold restart 90
Do a quick restart 90
Examine the gas pressure 91
Examine the gas quality 92
Common cutting and gouging problems 93
Cutting problems 93
Gouging problems 94
Fault icons and fault codes 96
Fault icons 96
Fault codes 97
Remove fault code conditions 98
Operational faults 98
Internal component faults (1-*nn*-*n*, 2-*nn*-*n*, 3-*nn*-*n*) 109
Do a gas test 109
Enter gas test mode 109
While gas test mode is active 110
Exit gas test mode 111
Troubleshoot torch stuck open (TSO) fault codes that occur during postflow 112
Troubleshoot power-related problems with generators 112

7 Complete Regular Maintenance Tasks 113

Examine the plasma power supply and torch 113
Each use 115
With each cartridge change or each week (whichever is more frequent) 116
At 3 month intervals 117
Cartridge maintenance 118
Examine the air filter bowl and filter element 119
Drain water from the bowl (if necessary) 119
Remove the air filter bowl and filter element 119
Examine the air filter bowl and O-ring 120
Examine the filter element 121
Replace the air filter bowl, O-ring, and filter element 121
Install the air filter bowl and filter element 122

Introduction

Hypertherm's CE-marked equipment is built in compliance with standard EN60974-10. The equipment should be installed and used in accordance with the information below to achieve electromagnetic compatibility.

The limits required by EN60974-10 may not be adequate to completely eliminate interference when the affected equipment is in close proximity or has a high degree of sensitivity. In such cases it may be necessary to use other measures to further reduce interference.

This cutting equipment is designed for use only in an industrial environment.

Installation and use

The user is responsible for installing and using the plasma equipment according to the manufacturer's instructions.

If electromagnetic disturbances are detected then it shall be the responsibility of the user to resolve the situation with the technical assistance of the manufacturer. In some cases this remedial action may be as simple as earthing the cutting circuit, see *Earthing of the workpiece*. In other cases, it could involve constructing an electromagnetic screen enclosing the power source and the work complete with associated input filters. In all cases, electromagnetic disturbances must be reduced to the point where they are no longer troublesome.

Assessment of area

Before installing the equipment, the user shall make an assessment of potential electromagnetic problems in the surrounding area. The following shall be taken into account:

- **a.** Other supply cables, control cables, signaling and telephone cables; above, below and adjacent to the cutting equipment.
- **b.** Radio and television transmitters and receivers.
- **c.** Computer and other control equipment.
- **d.** Safety critical equipment, for example guarding of industrial equipment.
- **e.** Health of the people around, for example the use of pacemakers and hearing aids.
- **f.** Equipment used for calibration or measurement.
- **g.** Immunity of other equipment in the environment. User shall ensure that other equipment being used in the environment is compatible. This may require additional protection measures.
- **h.** Time of day that cutting or other activities are to be carried out.

The size of the surrounding area to be considered will depend on the structure of the building and other activities that are taking place. The surrounding area may extend beyond the boundaries of the premises.

Methods of reducing emissions

Mains supply

Cutting equipment must be connected to the mains supply according to the manufacturer's recommendations. If interference occurs, it may be necessary to take additional precautions such as filtering of the mains supply.

Consideration should be given to shielding the supply cable of permanently installed cutting equipment, in metallic conduit or equivalent. Shielding should be electrically continuous throughout its length. The shielding should be connected to the cutting mains supply so that good electrical contact is maintained between the conduit and the cutting power source enclosure.

Maintenance of cutting equipment

The cutting equipment must be routinely maintained according to the manufacturer's recommendations. All access and service doors and covers should be closed and properly fastened when the cutting equipment is in operation. The cutting equipment should not be modified in any way, except as set forth in and in accordance with the manufacturer's written instructions. For example, the spark gaps of arc striking and stabilizing devices should be adjusted and maintained according to the manufacturer's recommendations.

Cutting cables

The cutting cables should be kept as short as possible and should be positioned close together, running at or close to the floor level.

Equipotential bonding

Bonding of all metallic components in the cutting installation and adjacent to it should be considered.

However, metallic components bonded to the workpiece will increase the risk that the operator could receive a shock by touching these metallic components and the electrode (nozzle for laser heads) at the same time.

The operator should be insulated from all such bonded metallic components.

Earthing of the workpiece

Where the workpiece is not bonded to earth for electrical safety, nor connected to earth because of its size and position, for example, ship's hull or building steel work, a connection bonding the workpiece to earth may reduce emissions in some, but not all instances. Care should be taken to prevent the earthing of the workpiece increasing the risk of injury to users, or damage to other electrical equipment. Where necessary, the connection of the workpiece to earth should be made by a direct connection to the workpiece, but in some countries where direct connection is not permitted, the bonding should be achieved by suitable capacitances selected according to national regulations.

Note: The cutting circuit may or may not be earthed for safety reasons. Changing the earthing arrangements should only be authorized by a person who is competent to assess whether the changes will increase the risk of injury, for example, by allowing parallel cutting current return paths which may damage the earth circuits of other equipment.
Further guidance is provided in IEC 60974-9, Arc Welding Equipment, Part 9: Installation and Use.

Screening and shielding

Selective screening and shielding of other cables and equipment in the surrounding area may alleviate problems of interference. Screening of the entire plasma cutting installation may be considered for special applications.

Attention

Genuine Hypertherm parts are the factory-recommended replacement parts for your Hypertherm system. Any damage or injury caused by the use of other than genuine Hypertherm parts may not be covered by the Hypertherm warranty, and will constitute misuse of the Hypertherm Product.

You are solely responsible for the safe use of the Product. Hypertherm does not and cannot make any guarantee or warranty regarding the safe use of the product in your environment.

General

Hypertherm, Inc. warrants that its Products shall be free from defects in materials and workmanship for the specific periods of time set forth herein and as follows: if Hypertherm is notified of a defect (i) with respect to the plasma power supply within a period of two (2) years from the date of its delivery to you, with the exception of Powermax brand power supplies, which shall be within a period of three (3) years from the date of delivery to you, and (ii) with respect to the torch and leads within a period of one (1) year from its date of delivery to you, with the exception of the HPRXD short torch with integrated lead, which shall be within a period of six (6) months from the date of delivery to you, and with respect to torch lifter assemblies within a period of one (1) year from its date of delivery to you, and with respect to Automation products one (1) year from its date of delivery to you, with the exception of the EDGE Connect CNC, EDGE Connect T CNC, EDGE Connect TC CNC, EDGE Pro CNC, EDGE Pro Ti CNC, MicroEDGE Pro CNC, and ArcGlide THC, which shall be within a period of two (2) years from the date of delivery to you, and (iii) with respect to HyIntensity fiber laser components within a period of two (2) years from the date of its delivery to you, with the exception of laser heads and beam delivery cables, which shall be within a period of one (1) year from its date of delivery to you.

All third-party engines, engine accessories, alternators, and alternator accessories are covered by the respective manufacturers' warranties and not covered by this warranty.

This warranty shall not apply to any Powermax brand power supplies that have been used with phase converters. In addition, Hypertherm does not warranty systems that have been damaged as a result of poor power quality, whether from phase converters or incoming line power. This warranty shall not apply to any product which has been incorrectly installed, modified, or otherwise damaged.

Hypertherm provides repair, replacement or adjustment of the Product as the sole and exclusive remedy, if and only if the warranty set forth herein properly is invoked and applies. Hypertherm, at its sole option, shall repair, replace, or adjust, free of charge, any defective Products covered by this warranty which shall be returned with Hypertherm's prior authorization (which shall not be unreasonably withheld), properly packed, to Hypertherm's place of business in Hanover, New Hampshire, or to an authorized Hypertherm repair facility, all costs, insurance and freight pre paid by the customer. Hypertherm shall not be liable for any repairs, replacement, or adjustments of Products covered by this warranty, except those made pursuant to this paragraph and with Hypertherm's prior written consent.

The warranty set forth above is exclusive and is in lieu of all other warranties, express, implied, statutory, or otherwise with respect to the Products or as to the results which may be obtained therefrom, and all implied warranties or conditions of quality or of merchantability or fitness for a particular purpose or against infringement. The foregoing shall constitute the sole and exclusive remedy for any breach by Hypertherm of its warranty.

Distributors/OEMs may offer different or additional warranties, but Distributors/OEMs are not authorized to give any additional warranty protection to you or make any representation to you purporting to be binding upon Hypertherm.

Patent indemnity

Except only in cases of products not manufactured by Hypertherm or manufactured by a person other than Hypertherm not in strict conformity with Hypertherm's specifications and in cases of designs, processes, formulae, or combinations not developed or purported to be developed by Hypertherm, Hypertherm will have the right to defend or settle, at its own expense, any suit or proceeding brought against you alleging that the use of the Hypertherm product, alone and not in combination with any other product not supplied by Hypertherm, infringes any patent of any third party. You shall notify Hypertherm promptly upon learning of any action or threatened action in connection with any such alleged infringement (and in any event no longer than fourteen (14) days after learning of any action or threat of action), and Hypertherm's obligation to defend shall be conditioned upon Hypertherm's sole control of, and the indemnified party's cooperation and assistance in, the defense of the claim.

Limitation of liability

In no event shall Hypertherm be liable to any person or entity for any incidental, consequential direct, indirect, punitive or exemplary damages (including but not limited to lost profits) regardless of whether such liability is based on breach of contract, tort, strict liability, breach of warranty, failure of essential purpose, or otherwise, and even if advised of the possibility of such damages. Hypertherm shall not be liable for any losses to Distributor based on down time, lost production or lost profits. It is the intention of the Distributor and Hypertherm that this provision be construed by a court as being the broadest limitation of liability consistent with applicable law.

National and local codes

National and local codes governing plumbing and electrical installation shall take precedence over any instructions contained in this manual. In no event shall Hypertherm be liable for injury to persons or property damage by reason of any code violation or poor work practices.

Liability cap

In no event shall Hypertherm's liability, if any, whether such liability is based on breach of contract, tort, strict liability, breach of warranties, failure of essential purpose or otherwise, for any claim, action, suit or proceeding (whether in court, arbitration, regulatory proceeding or otherwise) arising out of or relating to the use of the Products exceed in the aggregate the amount paid for the Products that gave rise to such claim.

Insurance

At all times you will have and maintain insurance in such quantities and types, and with coverage sufficient and appropriate to defend and to hold Hypertherm harmless in the event of any cause of action arising from the use of the products.

Transfer of rights

You may transfer any remaining rights you may have hereunder only in connection with the sale of all or substantially all of your assets or capital stock to a successor in interest who agrees to be bound by all of the terms and conditions of this Warranty. Within thirty (30) days before any such transfer occurs, you agree to notify in writing Hypertherm, which reserves the right of approval. Should you fail timely to notify Hypertherm and seek its approval as set forth herein, the Warranty set forth herein shall be null and void and you will have no further recourse against Hypertherm under the Warranty or otherwise.

Waterjet product warranty coverage

Product	Parts coverage
HyPrecision pumps	27 months from the ship date, or 24 months from the date of proven installation, or 4,000 hours, whichever occurs first
PowerDredge abrasive removal system	15 months from the ship date or 12 months from the date of proven installation, whichever occurs first
EcoSift abrasive recycling system	15 months from the ship date or 12 months from the date of proven installation, whichever occurs first
Abrasive metering devices	15 months from the ship date or 12 months from the date of proven installation, whichever occurs first
On/off valve air actuators	15 months from the ship date or 12 months from the date of proven installation, whichever occurs first
Diamond orifices	600 hours of use with the use of a thimble filter and compliance with Hypertherm's water quality requirements

Consumable parts are not covered by this warranty. Consumable parts include, but are not limited to, high-pressure water seals, check valves, cylinders, bleed-down valves, low-pressure seals, high-pressure tubing, low- and high-pressure water filters and abrasive collection bags. All third-party pumps, pump accessories, hoppers, hopper accessories, dryer boxes, dryer box accessories and plumbing accessories are covered by the respective manufacturers' warranties and not covered by this warranty.

1 Where to Find Information

This operator manual includes the following information for the Powermax45 SYNC plasma power supply and SmartSYNC™ hand torches:

- Specifications, ratings, and installation and setup information
- Operating instructions for the plasma power supply and torch
- Instructions for cutting, piercing, gouging, and marking
- Maintenance and troubleshooting information

For related information, refer to the following documents:

- *Safety and Compliance Manual* (80669C)
- *Powermax45/65/85/105 SYNC Cut Charts Guide* (810500MU)
- *Powermax45/65/85/105 SYNC Parts Guide* (810490)
- *Powermax45/65/85/105 SYNC Mechanized Cutting Guide* (810480)

Technical documentation is also available at www.hypertherm.com/docs.

Technical documentation is current as of the date of its release. Subsequent revisions are possible. Refer to www.hypertherm.com/docs for the most recent revisions of released documents.

2 Install and Set Up the Plasma Power Supply

The Powermax45 SYNC is a portable 45 A plasma cutting system that you can use for many handheld and mechanized cutting and gouging applications. The system's automatic gas and automatic voltage features make it easy to set up and use even if you have limited plasma cutting experience.

With the Powermax45 SYNC you can:

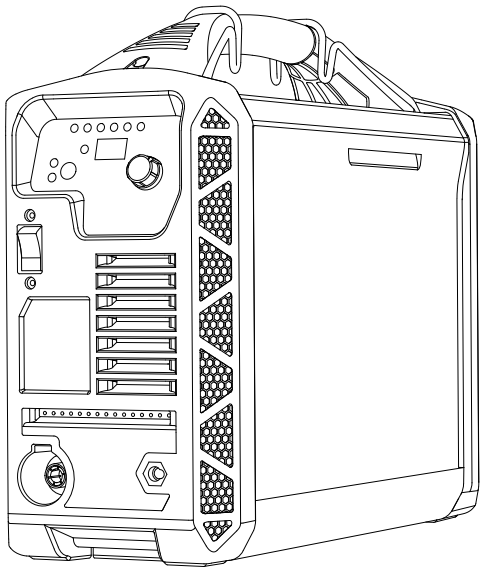

- Use air or nitrogen to cut electrically conductive metals such as mild steel, stainless steel, and aluminum.
- Use F5 gas to cut stainless steel.
- Use a single-piece cartridge instead of a set of consumables.
- Let the plasma power supply automatically set the operating mode, output current (A), and gas pressure related to the SmartSYNC torch and Hypertherm cartridge that you install.
- Monitor cartridge life using the Hypertherm Cartridge Reader kit (528083).
- Lock the SmartSYNC torches without setting the plasma power supply to OFF.
- Change between torches using the FastConnect™ system (quick-disconnect).

Make sure that you have all the system components

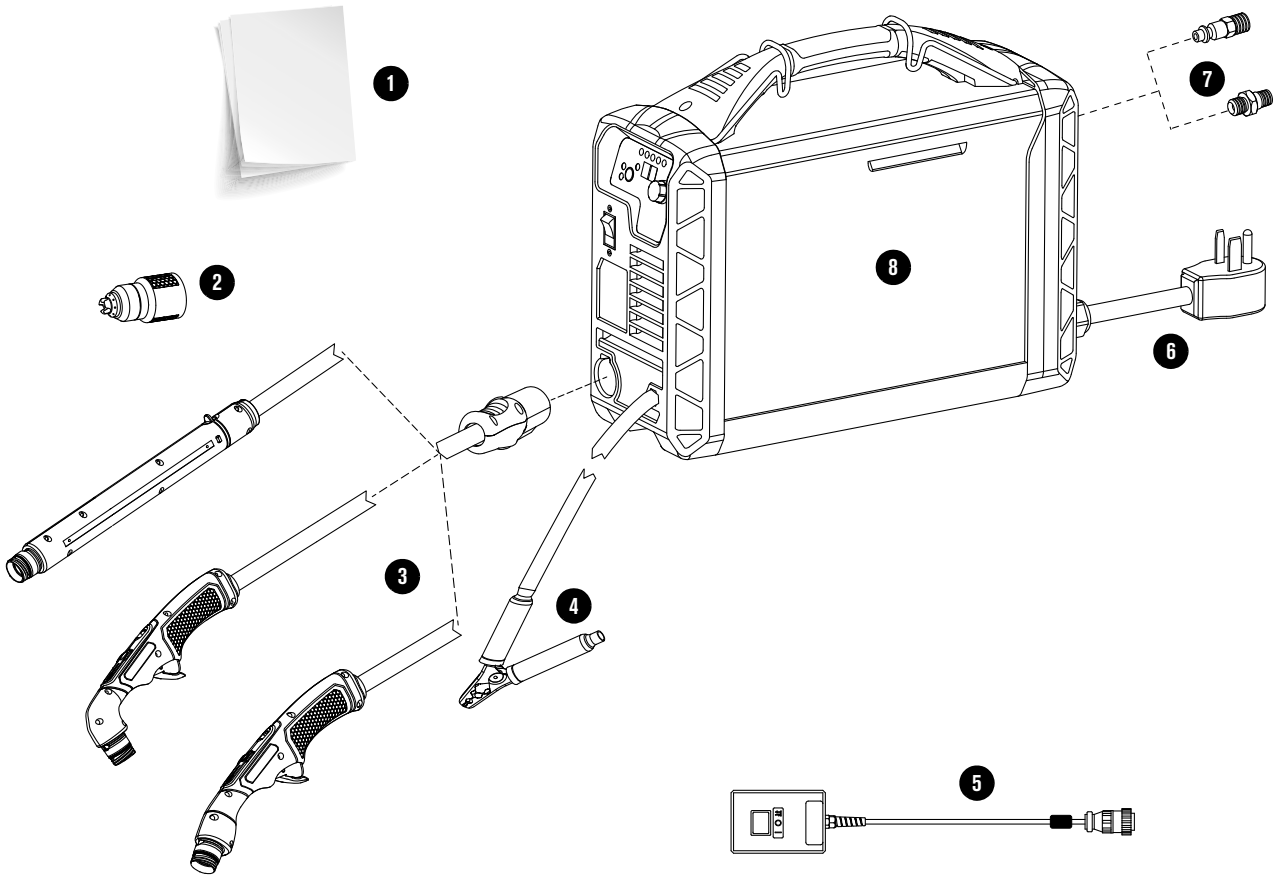

1 Documentation
- Product Safety Information and Instructions (811500MU)
- Radio Equipment Directive (810600MU)
- Fault code labels (811490MU)
- Powermax45 SYNC Getting Started Guide (811550MU)

2 SmartSYNC® cartridge

3 15° or 75° hand torch with lead or machine torch with lead

4 Work clamp with work lead

5 Remote-start pendant (optional – mechanized configurations only)

6 Power cord*

7 Region-specific gas inlet fitting (may not be preinstalled)

8 Plasma power supply

* CE/CCC and 480 V CSA models: power cord with no power plug

CSA 200 V – 240 V models: power cord with 50 A, 250 V plug (NEMA 6-50P)

What to do if components are missing or damaged

- **Claims for damage during shipment**
  - Send a claim to the carrier if your system was damaged during shipment.
  - Get the system's model number and serial number from the data plate on the bottom of the plasma power supply. Refer to page 21 for a sample data plate.
  - Get a copy of the bill of lading from Hypertherm. For additional assistance, contact the nearest Hypertherm office listed in the front of this manual.
- **Claims for missing or damaged merchandise**
  - Speak to your Hypertherm distributor or authorized repair facility, or speak to the nearest Hypertherm office shown in the front of this manual.

Hypertherm plasma power supply ratings

Rated open-circuit voltage (U_0)	200 V – 240 V, CSA/CE/CCC 400 V, CE/CCC 480 V, CSA	275 VDC 265 VDC 275 VDC
Output characteristic*	Drooping	
Rated output current (I_2)	20 A – 45 A	
Rated output voltage (U_2)	155 VDC	
Duty cycle at 40°C (104°F)**	50% at 45 A (I_2) / 155 VDC (U_2) 60% at 41 A (I_2) / 155 VDC (U_2) 100% at 32 A (I_2) / 155 VDC (U_2)	
Operating temperature	-10°C – 40°C (14°F – 104°F)	
Storage temperature	-25°C – 55°C (-13°F – 131°F)	
Power factor	200 V – 240 V, 1-phase, CSA/CE/CCC 400 V, 3-phase, CE/CCC 480 V, 3-phase, CSA	0.99 0.94 0.93
Idle state power consumption (CE systems)	230 V 400 V	17 W 23 W
Power source efficiency at rated maximum output power (CE systems)	230 V 400 V	90.3% 89.9%
R_{sce} – Short Circuit Ratio (CE systems only)	U_1 – Volts AC rms, 3-phase 400 V, CE	R_{sce} 73
EMC emissions classification CISPR 11 (CE models only)***	Class A	

Input voltage (U1) / Input current (I1) at rated output (U2 MAX I2 MAX) (Refer to Voltage configurations on page 31.)	CSA (50 Hz/60Hz) 1-phase: ▪ 200 V: 40 A ▪ 208 V: 37.5 A ▪ 240 V: 33 A 3-phase ▪ 480 V: 10 A	CE/CCC (50 Hz/60 Hz) 1-phase†,†† ▪ 220 V: 37 A ▪ 230 V: 34.3 A 3-phase†,††† ▪ 380 V: 13 A ▪ 400 V: 12 A	
Gas type	Air	Nitrogen (N_2)	F5‡
Gas quality	Clean, dry, oil-free per ISO 8573-1 Class 1.2.2	99.95% pure Clean, dry, oil-free	99.98% pure (F5 = 95% nitrogen [N_2], 5% hydrogen [H])
Recommended gas inlet flow rate/pressure	Cutting	188.8 L/min at 5.9 bar (400 scfh at 85 psi)	
	Maximum removal gouging	165.2 slpm (350 scfh) at a minimum 4.1 bar (60 psi)	

* Defined as a plot of output voltage versus output current.

** Refer to the data plate on the bottom of the plasma power supply for more information on duty cycle and for IEC ratings.

*** NOTICE: This Class A equipment is not intended for use in residential locations where the public low voltage supply system supplies the electrical power. It is not always easy to supply electromagnetic compatibility in those locations, because of conducted as well as radiated disturbances.

† This product meets the technical requirements of IEC 61000-3-3 and is not subject to conditional connection.

†† Equipment complies with IEC 61000-3-12.

††† Equipment complies with IEC 61000-3-12 if the short-circuit power S_{sc} is greater than or equal to 1003 KVA at the interface point between the operator's supply and the public system. The installer or user of the equipment must consult with the distribution network operator, if necessary, to ensure that the equipment is connected only to a power supply with a short-circuit power (Ssc) greater than or equal to 1003 KVA.

‡ F5 is only recommended to cut stainless steel.

Find system specifications on the data plate

The data plate on the bottom of the plasma power supply contains 2 sets of ratings:

- The **HYP** ratings are Hypertherm plasma power supply ratings. They show the capability of the system related to Hypertherm's internal testing.
- The **IEC** ratings are the minimum ratings that the system must get to meet the requirements of IEC standard 60974-1.

CSA and CE/CCC data plates have small differences. This sample is a CSA data plate.

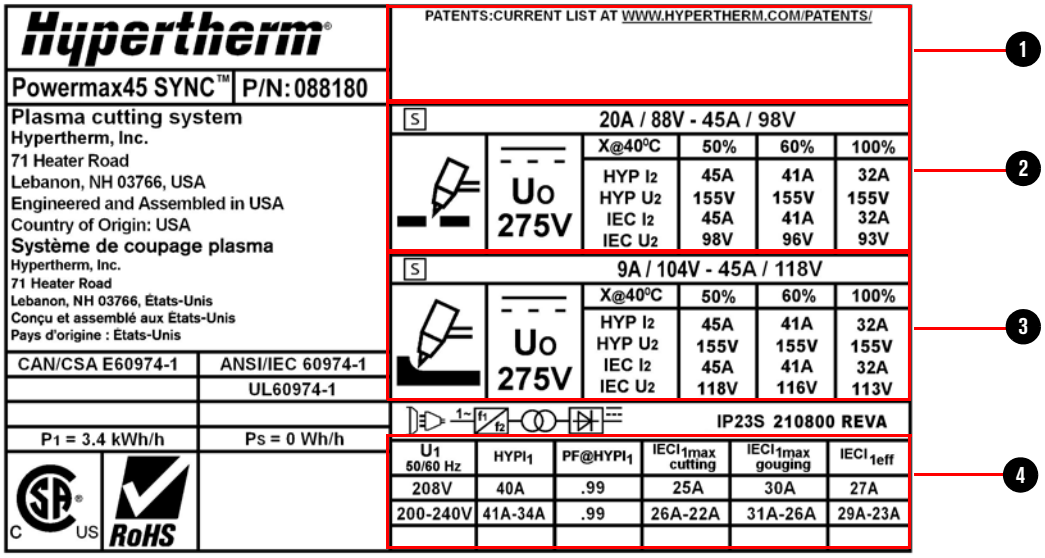

1 Serial number, bar code, and date made

2 Plasma cutting ratings

3 Plasma gouging ratings

4 Plasma power supply ratings

HYP = Hypertherm internal rating

IEC = International Electrotechnical Commission rating

I_1 = Input current (A)

I_2 = Conventional welding current (A)

PF = Power factor

U0 = Rated no load voltage (V)

U1 = Input voltage (V)

U2 = Conventional welding voltage (V)

X = Duty cycle (%)

Find the part number for your system

The part number for your plasma power supply is near the top of the data plate.

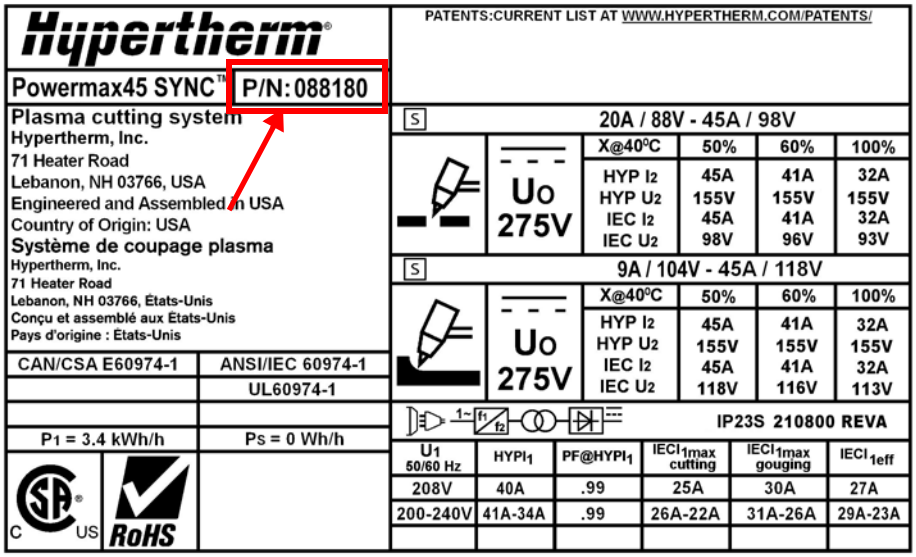

Critical raw materials

Critical raw material	Components that contain more than 1 gram
Antimony	Torch leads
Bauxite	Heatsinks, metal covers
Borate	All printed circuit boards
Magnesium	Heatsinks, metal covers
Silicon metal	Heatsinks, metal covers
Strontium	Fans

Symbols and marks

Your product may have one or more of the following marks on or near the data plate. Because of differences and conflicts in national regulations, not all marks are applied to every version of a product.

S mark

The S mark indicates that the power supply and torch are suitable for operations carried out in environments with increased hazard of electrical shock according to IEC 60974-1.

CSA mark

Products with a CSA mark meet the United States and Canadian regulations for product safety. The products were evaluated, tested, and certified by CSA-International. Alternatively, the product may have a mark by one of the other Nationally Recognized Testing Laboratories (NRTL) accredited in both the United States and Canada, such as UL or TÜV.

CE mark

The CE marking signifies the manufacturer's declaration of conformity to applicable European directives and standards. Only those versions of products with a CE marking located on or near the data plate comply with European Directives. Applicable directives may include the European Low Voltage Directive, the European Electromagnetic Compatibility (EMC) Directive, the Radio Equipment Directive (RED), and the Restriction of Hazardous Substances (RoHS) Directive. See the European CE Declaration of Conformity for details.

Eurasian Customs Union (CU) mark

CE versions of products that include an EAC mark of conformity meet the product safety and EMC requirements for export to Russia, Belarus, and Kazakhstan.

GOST-TR mark

CE versions of products that include a GOST-TR mark of conformity meet the product safety and EMC requirements for export to the Russian Federation.

RCM mark

CE versions of products with an RCM mark comply with the EMC and safety regulations required for sale in Australia and New Zealand.

CCC mark

The China Compulsory Certification (CCC) mark indicates that the product has been tested and found compliant with product safety regulations required for sale in China.

UkrSEPRO mark

The CE versions of products that include a UkrSEPRO mark of conformity meet the product safety and EMC requirements for export to the Ukraine.

Serbian AAA mark

CE versions of products that include a AAA Serbian mark meet the product safety and EMC requirements for export to Serbia.

RoHS mark

The RoHS mark indicates that the product meets the requirements of the European Restriction of Hazardous Substances (RoHS) Directive.

United Kingdom Conformity Assessed mark

CE versions of products that include a UKCA mark of conformity meet the product safety, EMC, RF, and RoHS requirements for export to the UK.

International Electrotechnical Commission (IEC) symbols

The following symbols can appear on the data plate, control labels, switches, and light-emitting diodes (LEDs).

Direct current (DC)

Alternating current (AC)

Plasma torch cutting

Gouging

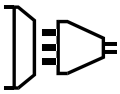

AC input power connection

The terminal for the external protective (earth) conductor

I

Power is ON

O

Power is OFF

An inverter-based power source, either 1-phase or 3-phase

Volt/amperage curve, “drooping” characteristic

Acoustical noise levels

This plasma system can make more than the permitted acoustical noise levels as defined by national and local codes. Always put on correct ear protection when cutting or gouging. Any acoustical noise measurements taken are related to the specific environment in which the system is used. Refer to *Noise can damage hearing* in the *Safety and Compliance Manual* (80669C).

In addition, you can find an *Acoustical Noise Data Sheet* for your system at www.hypertherm.com/docs. In the search box, enter **data sheet**.

Radio frequency identification (RFID) specifications

The Hypertherm RFID near-field wireless communication system contains these components:

- A passive RFID tag in the Hypertherm cartridge
- A wireless radio transceiver on the printed circuit board (PCB) in the SmartSYNC torch:
  - Operating frequency: 13.56 MHz
  - Protocol: ISO/IEC 15693
  - Maximum range: 8 mm (0.32 inch)
  - Maximum transmit power: 104 mW

Cutting specifications

Recommended cut capacity

Cut speed	Material thickness
500 mm/min (20 inches per minute [in/min])*	16 mm (5/8 inch)
250 mm/min (10 in/min)*	22 mm (7/8 inch)
125 mm/min (5 in/min)* – severance capacity	29 mm (1-1/8 inch)

* Cut capacity speeds are not necessarily maximum speeds. They are the speeds at which the plasma power supply is rated to cut that thickness.

Pierce capacity

Torch type	Material thickness
Handheld	12 mm (1/2 inch)

Maximum cut speeds (mild steel)

Maximum cut speeds are the results of Hypertherm's laboratory testing. Actual cutting speeds may be different for different cutting applications.

Material thickness	Maximum cut speed
6 mm (1/4 inch)	2286 mm/min (90 in/min)
9 mm (3/8 inch)	1219 mm/min (48 in/min)
12 mm (1/2 inch)	762 mm/min (30 in/min)
16 mm (5/8 inch)	508 mm/min (20 in/min)
19 mm (3/4 inch)	330 mm/min (13 in/min)
25 mm (1 inch)	178 mm/min (7 in/min)

Gouge capacity (mild steel)

Process	Output current	Metal removal rate
Maximum Removal gouging (26 A – 45 A)	45 A	3.4 kg/hour (7.5 lb/hour)

Put the plasma power supply into the correct position

⚠ WARNING

CHANCE OF ELECTRIC SHOCK

Never cut under water or submerge the torch in water. Electric shock can cause serious injury.

⚠ WARNING

TOXIC FUMES CAN CAUSE INJURY OR DEATH

Some metals, including stainless steel, can release toxic fumes when cut. Make sure that your work site has sufficient ventilation to make sure that the air quality level meets all local and national standards and regulations. Refer to the *Safety and Compliance Manual* (80669C) for more information.

- Do not use the system in rain or snow.
- Put the plasma power supply near the line-disconnect switch or near an approved power receptacle for your installation.
- Keep at least 0.25 m (10 inches) of space around the plasma power supply for sufficient ventilation.

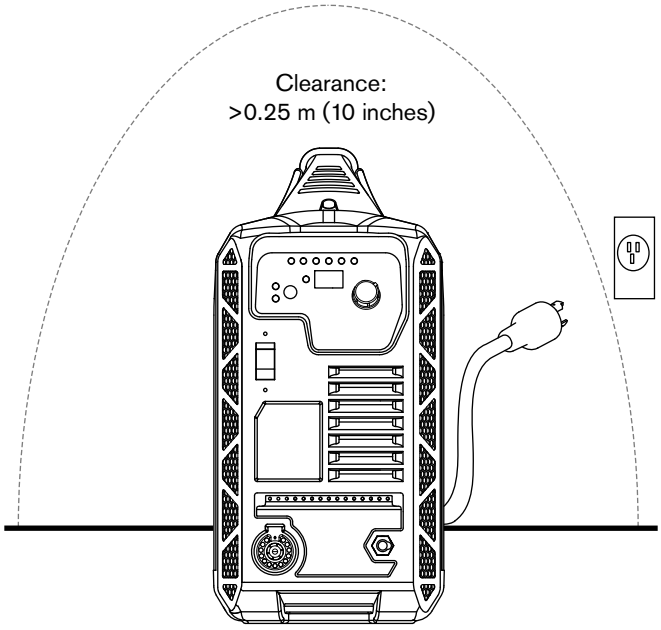

- Put the plasma power supply on a stable, level surface before you use it. The plasma power supply can fall over if it is set at an angle greater than 10°.

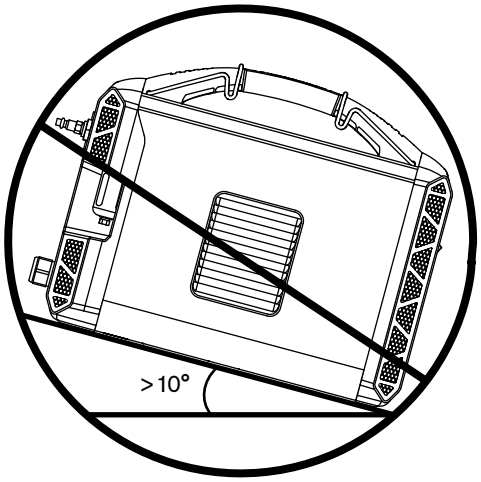

- Do not put the plasma power supply on its side. Doing so can cause a blockage of the air circulation necessary to keep internal components cool.

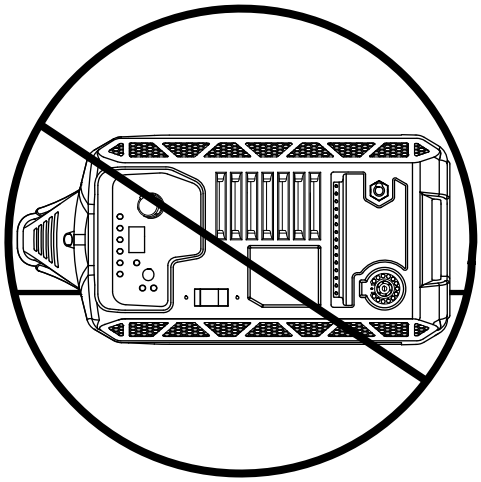

Plasma power supply dimensions and weight

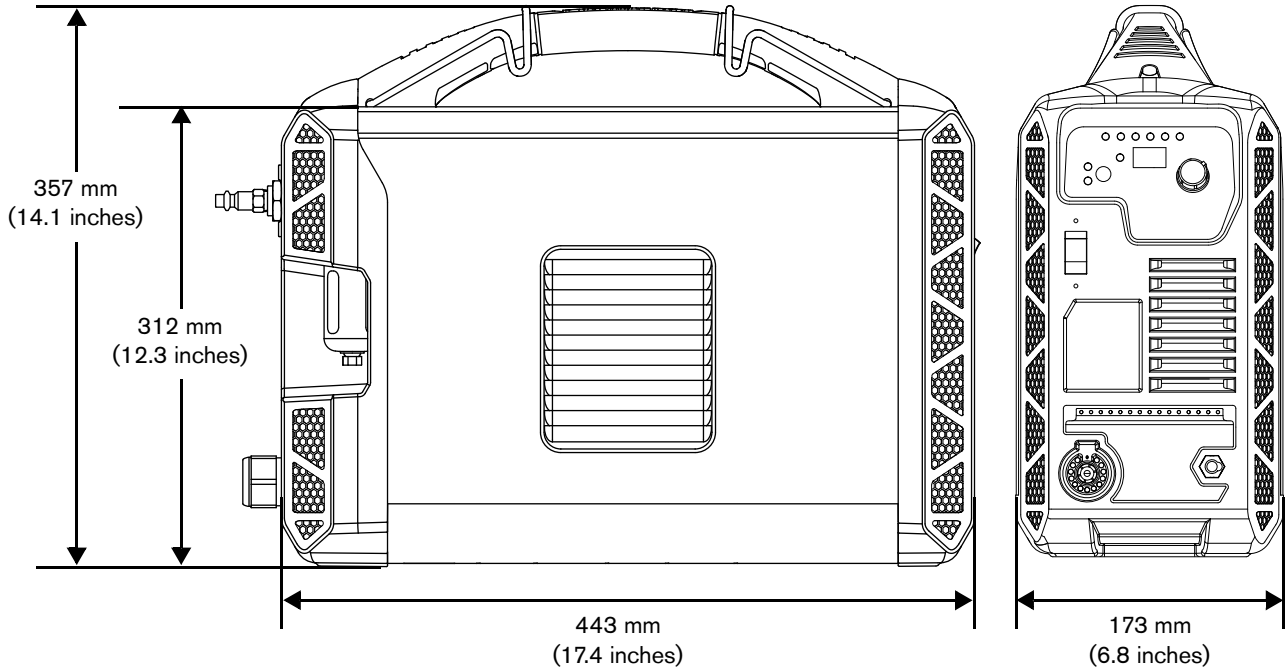

	Power supply with power cord	Power supply (and power cord) with 6.1 m (20 foot) hand torch and 7.6 m (25 foot) work lead
200 V – 240 V CSA	12 kg (26 lb)	14 kg (31 lb)
230 V CE/CCC	12 kg (26 lb)	15 kg (32 lb)
400 V CE/CCC	11 kg (25 lb)	14 kg (31 lb)
480 V CSA	11 kg (25 lb)	14 kg (31 lb)

Work lead weights

Work lead	Weight
Work clamp with 7.6 m (25 foot) work lead	1.2 kg (2.6 lb)
Work clamp with 15 m (50 foot) work lead	2.1 kg (4.7 lb)

For hand torch weights, refer to page 75. For machine torch weights, refer to the *Powermax45/65/85/105 SYNC Mechanized Cutting Guide* (810480).

Connect to electrical power

Use the Hypertherm input current ratings to determine conductor sizes for power connection and installation instructions. The Hypertherm ratings are designated **HYP** on the data plate on the bottom of the plasma power supply. Use the higher HYP input current value for installation purposes. See page 21 for a sample data plate.

NOTICE

Protect the circuit with appropriately sized time-delay fuses and a line-disconnect switch.

The maximum output voltage changes related to input voltage and the circuit's amperage. Because the current draw changes during startup, time-delay fuses are recommended. Time-delay fuses are resistant to currents up to 10 times the rated value for short periods of time.

NOTICE

Do not use phase converters to supply 3-phase power to your Powermax plasma power supply.

Hypertherm does not warranty systems that have been damaged as a result of poor power quality from phase converters or incoming line power.

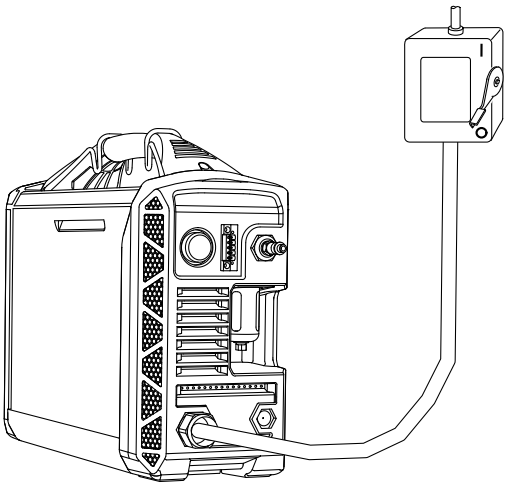

- Use a line-disconnect switch for each plasma power supply so that the operator can stop the incoming power quickly in an emergency.
- Put the switch in a location where the operator can get access easily. A licensed electrician must install the power switch according to national and local codes.
- The interrupt level of the switch must equal or be more than the continuous rating of the fuses.
- The switch must also do the following:
  - Isolate the electrical equipment and disconnect all live conductors from the incoming supply voltage when in the OFF position.
  - Have one OFF and one ON position that are clearly marked with **O** (OFF) and **I** (ON).
  - Have an external operating handle that can be locked in the OFF position.
  - Contain a power-operated mechanism that operates as an emergency stop.
  - Have approved time-delay fuses installed. Refer to Voltage configurations on page 31 for recommended fuse sizes.

Requirements for grounding

To make sure of personal safety and correct operation, and to decrease electromagnetic interference (EMI), the plasma power supply must be correctly grounded.

- The plasma power supply must be grounded through the power cord according to national and local electrical codes.
- 1-phase service must be of the 3-wire type with a green or green/yellow wire for the protective earth ground. 1-phase service must comply with national and local requirements. **Do not use a 2-wire service.**
- 3-phase service must be of the 4-wire type with a green or green/yellow wire for protective earth ground. 3-phase service must comply with national and local requirements.

Refer to the *Safety and Compliance Manual* (80669C) for more information on grounding.

For mechanized cutting systems, refer to *EMI grounding and shielding best practices* in the *Powermax45/65/85/105 SYNC Mechanized Cutting Guide* (810480).

Rated output (cutting power) of the plasma power supply

Wattage output shows a plasma power supply's cutting power more than its amperage output. The rated outputs for the systems are as follows:

Maximum output amperage	45 A
Maximum rated output voltage	155 VDC
Cutting power	6.9 kW

To calculate the cutting power in watts (W), multiply the maximum output amperage (A) by the maximum rated output voltage (VDC). For example:

45 A × 155 VDC = 6,975 W (6.9 kW)

Voltage configurations

The plasma power supply automatically adjusts for correct operation at the current input voltage. You do not have to change or rewire components. But you must do these tasks:

- Install the Hypertherm cartridge in the torch. Refer to Step 4 – Install the cartridge on page 48.
- Make sure that the output current (A) is correct for the cartridge that you installed. If necessary, turn the adjustment knob on the front panel to adjust the output current. Refer to Adjust the operating settings manually on page 57.

To operate the plasma power supply at full output and at its rated duty cycle, you must make your electrical service the correct size. The tables that follow show the maximum rated output for typical input voltages. The output setting that you use relates to the thickness of the workpiece and the limit of the input power to the plasma power supply.

In certain applications, such as gouging, stretching the plasma arc is common. Using the recommended fuse sizes allows for spikes in input current during this process.

CSA/CE/CCC 200 V – 240 V (1-phase)

Input voltage at 50 Hz/60 Hz*	200 V – 240 V
Input current at rated output (45 A x 155 V = 6.9 kW)	40 A – 33 A
Input current during arc stretch	44 A – 36 A
Fuse (time-delay)	50 A
Voltage tolerance	+20% to -15%

CSA 208 V (1-phase)

Input voltage	208 V
Input current at rated output (45 A x 155 V = 6.9 kW)	37 A
Input current during arc stretch	43 A
Fuse (time-delay)	50 A
Voltage tolerance	+20% to -15%

CCC 220 V (1-phase)

Input voltage	220 V
Input current at rated output (45 A x 155 V = 6.9 kW)	35 A
Input current during arc stretch	39 A
Fuse (time-delay)	50 A
Voltage tolerance	+20% to -15%

CE 230 V (1-phase)

Input voltage	230 V
Input current at rated output (45 A x 155 V = 6.9 kW)	34 A
Input current during arc stretch	37 A
Fuse (time-delay)	48 A
Voltage tolerance	+20% to -15%

CCC 380 V (3-phase)

Input voltage	380 V
Input current at rated output (45 A x 145 V = 6.5 kW)	13 A
Input current during arc stretch	15 A – 20 A
Fuse (time-delay)	20 A
Voltage tolerance	+20% to -15%

CE 400 V (3-phase)

Input voltage	400 V
Input current at rated output (45 A x 145 V = 6.5 kW)	12 A
Input current during arc stretch	15 A – 20 A
Fuse (time-delay)	20 A
Voltage tolerance	+20% to -15%

CSA 480 V (3-phase)

Input voltage	480 V
Input current at rated output (45 A x 145 V = 6.5 kW)	10 A
Input current during arc stretch	12 A – 17 A
Fuse (time-delay)	20 A
Voltage tolerance	+20% to -15%

Decrease output current and arc stretch for lower rated electrical service

If you operate the plasma power supply on an electrical service that is rated lower than what is recommended in Voltage configurations on page 31, you may need to:

- Decrease the cutting current (amperage setting). Refer to Adjust the operating settings manually on page 57.
- Decrease plasma arc stretch. The more you stretch the plasma arc, the more current the system pulls and the more likely you are to overheat the system or trip the circuit breaker.

Example: If you use a 1-phase system with an input voltage of 230 V on a 20 A breaker, the recommended output current is 19 A.

Input voltage	230 V
Input current at rated output (19 A x 155 V = 2.9 kW)	18 A
Input current during arc stretch	19 A
Voltage tolerance	+20% to -15%

Prepare the power cord and plug

CSA systems

Model	Configurations	Power cord	Power plug
1-phase	200 V – 240 V	10 AWG 3-wire	50 A, 250 V power plug (NEMA 6-50P) included 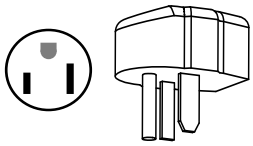
3-phase	480 V	14 AWG 4-wire	Power plug not included*

* An approved plug must be installed on the power cord by a licensed electrician according to all national and local codes.

CE/CCC systems

Model	Configurations	Power cord	Power plug
1-phase	200 V – 240 V	10 AWG 3-wire	Power plug not included*
		6 mm² 3-wire style H07RN-F**	
3-phase	380 / 400 V	2.5 mm² 4-wire styleH07RN-F**	Power plug not included*

* An approved plug must be installed on the power cord by a licensed electrician according to all national and local codes.

** Style H07RN-F cord is a harmonized, heavy-duty, flexible, rubber-insulated, black-neoprene-jacketed multi-conductor IEC60245-4 / EN50525 European power cord with **CE** printed on the cord. The H07RN-F cord used by Hypertherm also has a CCC certification to GB/T 5013.4, with **CCC** printed on the cord.

Extension cord recommendations

Use an extension cord that meets these requirements:

- Wire gauge is approved for the cord length and plasma power supply voltage
- Complies with national and local codes

Extension cords can cause the plasma power supply to receive less input voltage than the output of the circuit. This can limit the cut capacity of your plasma power supply.

The tables that follow give the recommended gauge sizes for different cord lengths and input voltages.

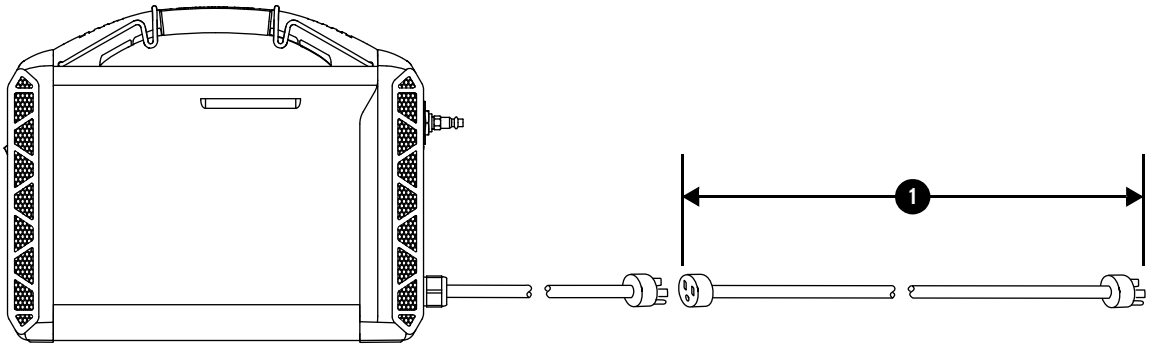

Input voltage	Phase	1	
		Cord Length	Cord Gauge
200 VAC – 240 VAC	1	up to 15 m (50 feet)	10 mm² (8 AWG)
		15 m – 30 m (50 feet – 100 feet)	16 mm² (6 AWG)
		30 m – 45 m (100 feet – 150 feet)	25 mm² (4 AWG)
380 VAC – 480 VAC	3	up to 15 m (50 feet)	4 mm² (12 AWG)
		15 m – 45 m (50 feet – 150 feet)	6 mm² (10 AWG)

Use a generator (if necessary)

When you use a generator, make sure that you:

- Only use a generator that meets Hypertherm plasma power supply ratings on page 19.
- Adjust the output current (A) if necessary related to the rating, age, and condition of the generator. Refer to Adjust the operating settings manually on page 57.
- A 10 kW generator is recommended for cutting when a full arc stretch is necessary, such as for many gouging applications. These generators let spikes in input current occur when you stretch the plasma arc.
- If a fault occurs, set the power switch on the plasma power supply to OFF (**O**). Wait approximately 1 minute before you set the power switch to ON (**I**).

Generators used with this system must meet the voltage requirements in the table below and in the Hypertherm plasma power supply ratings on page 19.

Engine drive rating	Plasma power supply output current	Performance (arc stretch)
10 kW	45 A	Full
8 kW	45 A	Limited
6 kW	30 A	Full

Adapter for 4-wire 1-phase connections (CSA 1-phase models only)

A 4-wire 1-phase connection (for example, NEMA 14-50R) is necessary for some generators. In this condition, use an adapter to connect the plasma power supply's 3-wire power cord plug (NEMA 6-50P) to the 4-wire connector on the generator. Refer to Prepare the power cord and plug on page 35 for more information.

Connect the gas supply

⚠ WARNING

EXPLOSION HAZARD

The filter bowl in the plasma power supply can explode if the gas pressure is more than 9.3 bar (135 psi). Never use more than the maximum gas pressure of 9.3 bar (135 psi).

1. Make sure that the correct gas inlet fitting is installed.
   - ❑ CSA models come with an industrial interchange quick-disconnect nipple with 1/4 NPT threads ❶. To install, tighten the fitting to 115 kg·cm (100 in·lb). The fitting comes with thread sealant applied.
   - ❑ CE/CCC models come with a British Pipe Thread adapter G-1/4 BSPP with 1/4 NPT threads ❷. To install, tighten the adapter to 104 kg·cm (90 in·lb)

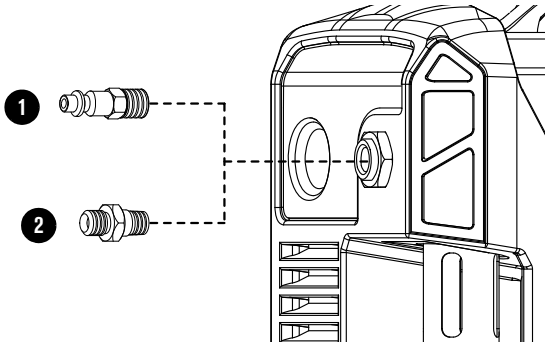

NOTICE

PTFE TAPE CAN CAUSE CLOGGED VALVES, REGULATORS, AND TORCHES

Never use PTFE tape on any joint preparation. Use only a liquid or paste thread sealant on male threads.

2. Get an inert-gas hose with the correct internal diameter.
   - ❑ For hoses that are less than 15 m (50 feet), use an internal diameter of 10 mm (3/8 inch) or greater.
   - ❑ For hoses that are 15 m – 30 m (50 feet – 100 feet), use an internal diameter of 13 mm (1/2 inch) or greater.

Do not use hoses with an internal diameter less than 10 mm (3/8 inch). Hoses that are too small can cause problems with cut quality and cut performance.

3. Connect the gas hose ❶ to the gas inlet fitting ❷. Refer to Inlet gas pressure requirements (while gas is flowing) on page 40.

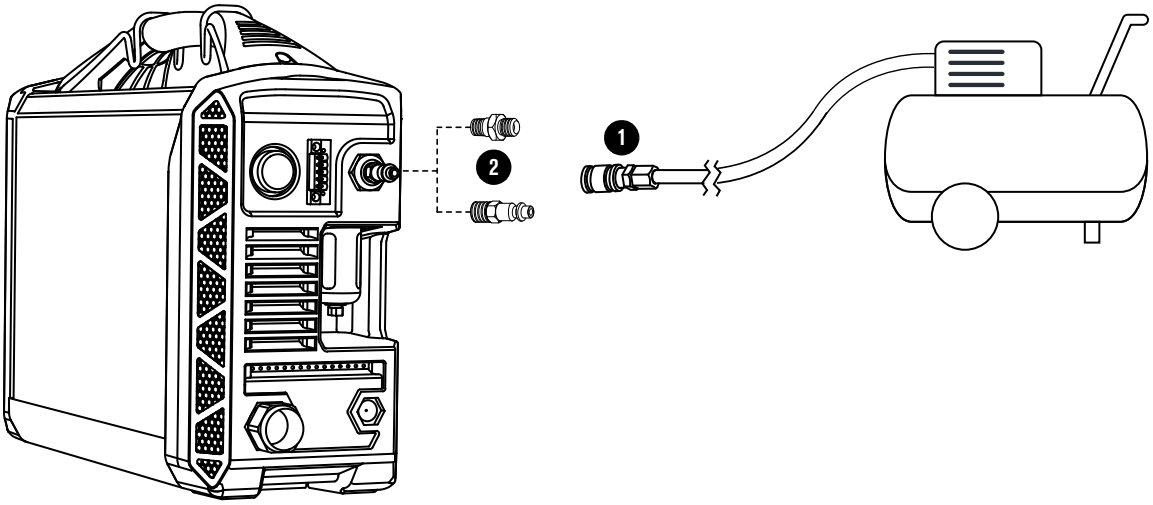

Gas supply source

Hypertherm recommends that air compressors supply air that meets these requirements of *ISO Standard 8573-1:2010 Class 1.4.2:**

Maximum particle count in 1.0 m^3:	▪ 20,000 at 0.1 microns – 0.5 microns ▪ 400 at 0.5 microns – 1.0 microns ▪ 10 at 1.0 microns – 5.0 microns
Maximum water vapor pressure dewpoint:	3°C (37°F)**
Maximum oil concentration:	0.1 mg/m^3 (for aerosol, liquid, and vapor)

* **Important:** Any air compressors that supply air to the cutting system must have filtration to remove oil.

** Speak to your air compressor manufacturer if you operate the cutting system in temperatures colder than 3°C (37°F) or if you are unsure that the air compressor can comply with the ISO standard for air quality.

NOTICE

DIRTY, OILY AIR CAN CAUSE DAMAGE TO THE AIR FILTER BOWL

Synthetic lubricants that are used in some air compressors can contain esters that cause damage to the polycarbonates in the air filter bowl. Use additional gas filtration if necessary.

- Use shop-compressed gas or cylinder-compressed gas.
  - Use a high-pressure regulator on either type of gas supply. The regulator must be able to supply gas to the air inlet on the plasma power supply at the specified flow rate and specified pressure.
  - **Use only clean, moisture-free gas.**
  - Oil, water, vapor, and other contaminants in the gas supply can cause damage to internal components over time.
  - Poor gas supply quality causes:
    - Decreased cut quality and cut speeds
    - Decreased cut thickness capability
    - Decreased consumable life

    To correct these problems, use an optional air filtration system. Refer to Add more gas filtration on page 41.

High-pressure gas cylinders

⚠ WARNING

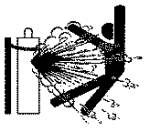

GAS CYLINDERS CAN EXPLODE IF DAMAGED

Gas cylinders contain gas under high pressure. If damaged, a cylinder can explode.

For high pressure regulators, comply with the manufacturer's guidelines for safe installation, operation, and maintenance.

Before operating a plasma power supply with compressed gas, read the safety instructions in the *Safety and Compliance Manual* (80669C). If you do not comply with these safety instructions, personal injury or equipment damage can occur.

⚠ WARNING

EXPLOSION HAZARD – CUTTING WITH FLAMMABLE OR OXIDIZING GASES

Do not use flammable or oxidizing gases with Powermax systems. These gases can cause explosive conditions during plasma cutting operations.

An example of an oxidizing gas is oxygen. Examples of flammable gases are acetylene, propylene, methane, and pure hydrogen. Refer to the *Safety and Compliance Manual* (80669C).

You can use the gases that follow to cut with this plasma power supply. Refer to Hypertherm plasma power supply ratings on page 19 for requirements on gas quality. **Do NOT use oxygen to cut with Powermax systems.**

- Compressed air
- Nitrogen
- F5 (stainless steel only)

If you use high-pressure gas cylinders as the gas supply, make sure that you:

- Refer to the manufacturer's specifications for installation and maintenance procedures of high-pressure regulators.
- Make sure that the cylinder has an adjustable high-pressure regulator with the following capabilities:
  - Gas outlet pressures up to 9.3 bar (135 psi). **Never use more than the maximum gas pressure of 9.3 bar (135 psi).**
  - Gas flow rate of 210 slpm (450 scfh)
- Make sure that the cylinder valves are clean and free of oil, grease, and other contaminants. Open each cylinder valve just long enough to blow out any dust that is possibly present.
- Connect the supply hose correctly to the cylinder.
- Inlet gas pressure requirements (while gas is flowing)

Maximum inlet pressure

Never exceed the maximum gas pressure of 9.3 bar (135 psi).Optimum inlet pressure

⚠ WARNING

EXPLOSION HAZARD

The filter bowl in the plasma power supply can explode if the gas pressure is more than 9.3 bar (135 psi). Never use more than the maximum gas pressure of 9.3 bar (135 psi).

For best system performance, make sure that the inlet gas pressure stays between 7.6 bar – 8.3 bar (110 psi – 120 psi) while gas is flowing.

Minimum inlet pressure and gas flow rate

The table that follows shows the minimum gas flow rate and inlet gas pressure requirements for the cutting, gouging, and marking processes.

Process	Minimum gas flow rate and inlet pressure
Cutting (20 A - 45 A)	212.4 slpm (450 scfh) @ 5.9 bar (85 psi)
Gouging (20 A - 45 A)	212.4 slpm (450 scfh) @ 4.8 bar (70 psi)
FineCut® Marking (9 A - 19 A)	141.6 slpm (300 scfh) @ 4.1 bar (60 psi)

You can adjust these pressures for different conditions that are specific to your environment.

Additional gas filtration installed between the gas supply and the plasma power supply can have an effect on gas pressure and gas flow. Speak to the filter manufacturer about gas pressure requirements. Hypertherm recommends that you install an inline pressure gauge at the gas inlet on the back of the plasma power supply. Use this gauge to monitor the gas pressure at the plasma power supply, after all external filtration.

Add more gas filtration

It is extremely important to keep a clean, dry gas line to:

- Prevent oil, water, dirt, and other contaminants from causing damage to internal components.
- Get optimal cut quality and consumable life.

Dirty, oily air is the root cause of many common problems that occur in Powermax systems. In some conditions it can void the warranty on the plasma power supply and on the torch. Refer to the gas quality recommendations in the ratings tables that start on page 19.

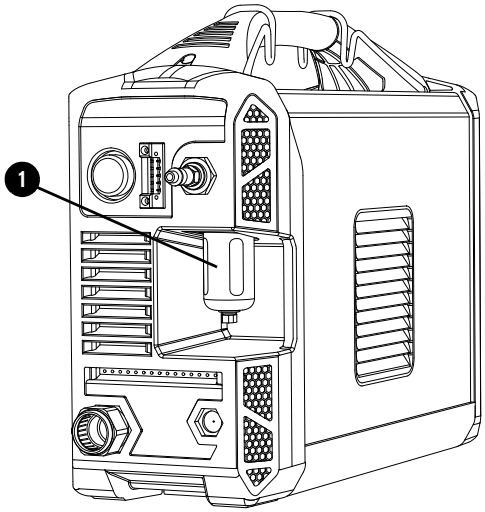

The plasma power supply contains a built-in air filter. Regularly do a check of the filter element inside the air filter bowl ❶ and replace it as necessary. Refer to Examine the air filter bowl and filter element on page 119.

The built-in air filter does not take the place of sufficient external filtration. Install an external filtration system if:

- You work in an environment that is very warm and humid.
- Your work site conditions introduce oil, vapors, or other contaminants into the gas line.

A 3-stage coalescing filtration system is recommended. A 3-stage filtering system works as follows to clean contaminants from the gas supply.

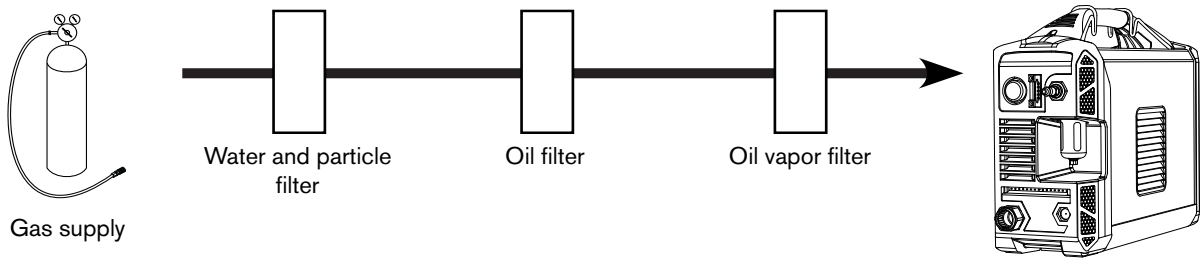

The filtering system must be installed between the gas supply and the plasma power supply.

Additional gas filtration can make higher pressure from the gas supply necessary. For the recommended gas inlet flow rate and pressure, refer to Inlet gas pressure requirements (while gas is flowing) on page 40. Hypertherm offers the following optional external filter kits:

- Kit 128647: The Eliminizer moisture removal air filter ❶ removes water and dirt from the gas supply. For more information, refer to the *Optional Air Filter Kit and Element Replacement Procedure Field Service Bulletin* (804180).
- Kit 428719: The oil removal air filter ❷ removes oil, oil aerosols, and dirt from the gas supply. For more information, refer to the *Optional Oil Removal Air Filter Kit and Element Replacement Field Service Bulletin* (809610).

If you use both external filters, install them in the order shown in Figure 1 to prevent damage to the gas line and equipment.

Figure 1 – Optional Hypertherm external filters

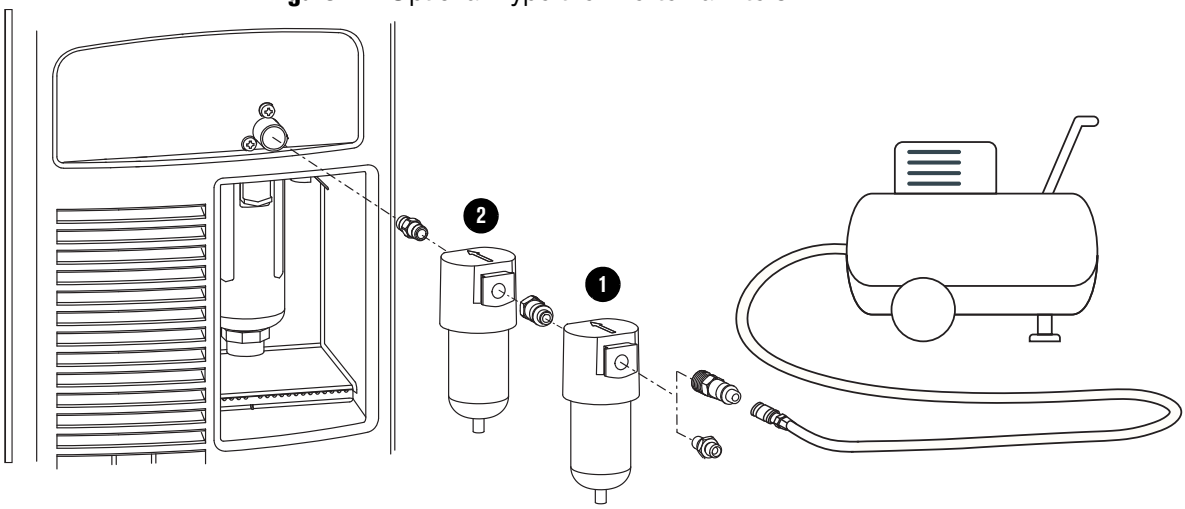

3 Operate the Plasma System

Step 1 – Make sure that the plasma power supply is connected to power and gas

1. Make sure that the plasma power supply's power cord is correctly connected to electrical power according to national and local codes. Refer to Connect to electrical power on page 30, and Prepare the power cord and plug on page 35.

2. Connect the gas supply line to the fitting on the back of the plasma power supply. Refer to page 37.
   - For gas supply requirements, refer to Inlet gas pressure requirements (while gas is flowing) on page 40.

Step 2 – Connect the torch lead

- Always set the power switch on the plasma power supply to OFF (**O**) before you connect or disconnect a torch.
- To connect a hand torch or machine torch, push the connector into the receptacle on the front of the plasma power supply. The connector makes a click when it is fully engaged.
- To disconnect the torch, push the red button ❶ on the connector and pull the connector out of the receptacle.

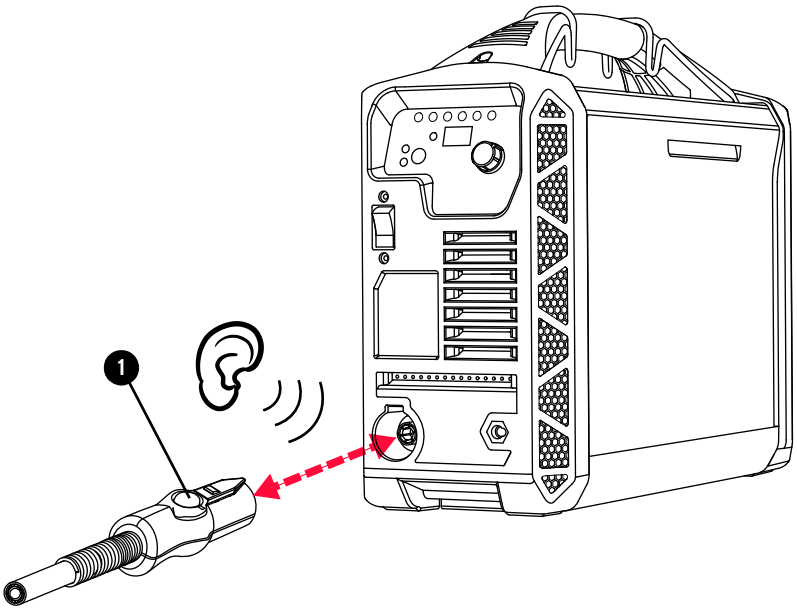

Step 3 – Connect the work lead and work clamp

NOTICE

INCORRECT WORK LEADS CAN CAUSE AN UNSTABLE PLASMA ARC

Work leads are approved for specific amperages, lengths, and connectors. Make sure that you use a work lead that is approved for your plasma power supply. Refer to the *Powermax45/65/85/105 SYNC Parts Guide* (810490). The amperage of a work lead is identified near the rubber boot of the work lead connector.

Work lead

1. Put the work lead connector in the receptacle on the front of the plasma power supply. Align the key ❶ on the connector with the opening in the receptacle.
2. Turn the connector clockwise approximately 1/4 turn until the connector is fully engaged and locked in position.

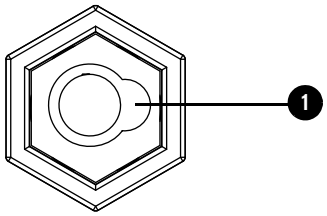

NOTICE

LOOSE WORK LEADS CAN OVERHEAT

Anytime you move the work lead or the plasma power supply, examine the work lead connector to make sure that it is fully and tightly connected to the plasma power supply.

Work clamp

NOTICE

Do not attach the work clamp under water. If the plasma power supply is below the work clamp, water can get into the plasma power supply through the work lead and cause severe damage.

Do not attach the work clamp to the portion of the workpiece to be cut away.

- **Hand cutting:** The work clamp must be connected to the workpiece that you are cutting.
- **Mechanized cutting:** If you are using this plasma power supply with a mechanized cutting system, you can connect the work clamp directly to the cutting table or to the workpiece you are cutting. Refer to your equipment manufacturer's instructions.
- Make sure that the work clamp makes good metal-to-metal contact with the workpiece or cutting table.
- Remove rust, dirt, paint, coatings, and other debris so that the work clamp makes sufficient contact with the workpiece or cutting table.
- Attach the work clamp as close as possible to the area being cut.

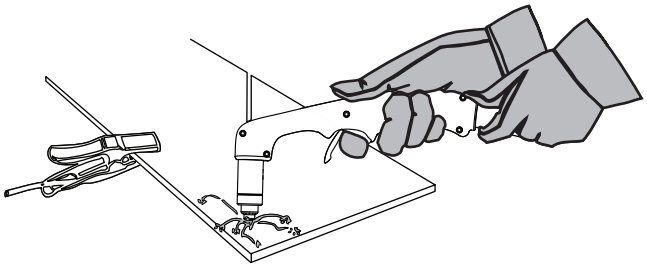

Step 4 – Install the cartridge

⚠ WARNING

INSTANT-ON TORCHES – PLASMA ARC CAN CAUSE INJURY, BURNS

Ignition of the plasma arc occurs immediately when you pull the torch trigger. Before changing the cartridge, one of the following steps is necessary. Whenever possible, complete the first step.

- Set the power switch on the plasma power supply to OFF (**O**).

  OR

- Move the torch-lock switch to the yellow lock (**X**) position. Pull the trigger to make sure that the torch does not fire a plasma arc.

Lock the torch

SmartSYNC torches include a switch that lets you lock the torch. This torch-lock switch prevents the torch from firing accidentally, even when the plasma power supply is ON.

Use this switch to lock the torch when it is not in use, when you change the Hypertherm cartridge, or when you move the plasma power supply or torch while the plasma power supply is ON.

Torch **LOCK** position:

- The **yellow** label with the "**X**" shows that the torch is not prepared to fire.
- Point the torch away from yourself and others, and pull the trigger to make sure that it does not fire.

  The Torch Cap LED on the front panel comes on when you remove the consumables or set the torch-disable switch to the yellow lock (**X**) position while the plasma power supply is still ON.

  The LED extinguishes after you install the consumables and set the torch-disable switch to the green "ready to fire" (✓) position.

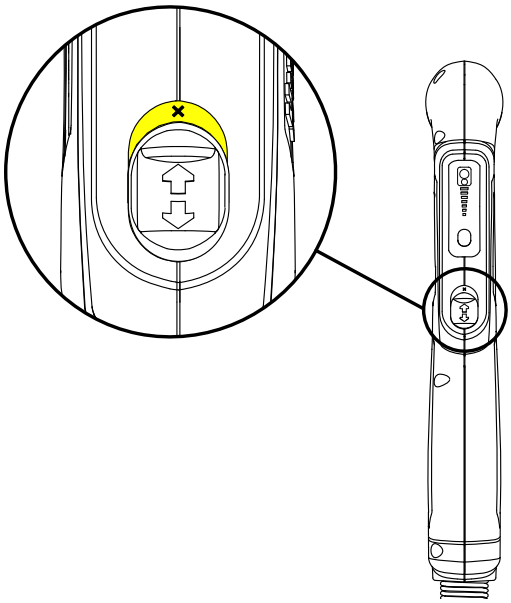

- You CAN install the cartridge.

Torch **"ready to fire"** position:

- The **green** label with the "✓" shows that the torch is prepared to fire.
- Do NOT change the cartridge.

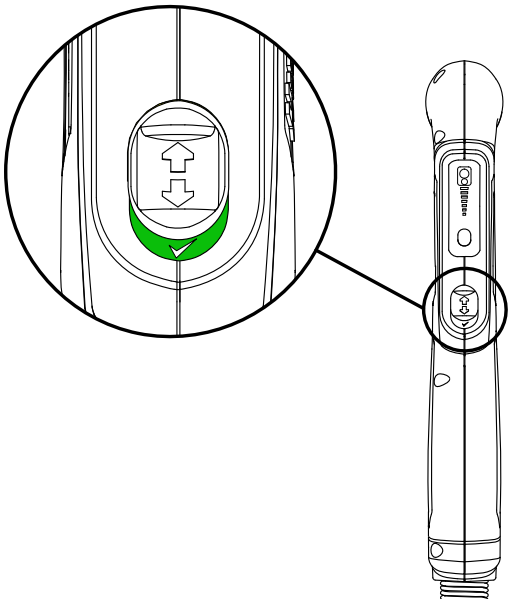

Install the cartridge

Cartridges are not preinstalled on new torches.

1. Make sure that the power switch on the plasma power supply stays OFF (**O**).
2. Make sure that the torch-lock switch on the torch is set to the yellow lock (**X**) position.
3. If this is a new torch, remove the vinyl cap from the torch.
4. Install the correct Hypertherm cartridge for your cutting or gouging application.
   - **Cutting and piercing with a hand torch:** Refer to Cut and Mark with the Hand Torch on page 63.
   - **Gouging with a hand torch:** Refer to Gouge with the Hand Torch on page 77.

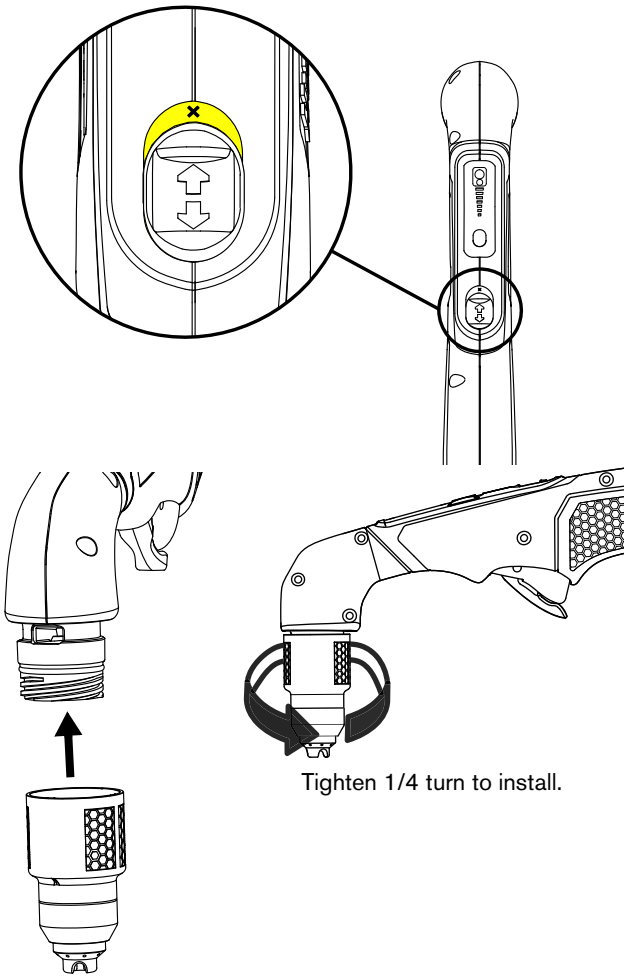

Cut expanded metal

To cut expanded metal, install a Hypertherm cutting cartridge. The system does not require a dedicated mode for cutting expanded metal.

Expanded metal has a slotted or mesh pattern. Cutting expanded metal causes cartridges to wear more quickly because a continuous pilot arc is necessary. A pilot arc occurs when the torch is fired but the plasma arc is not in contact with the workpiece.

Step 5 – Set the power switch to ON (I)

Set the power switch to ON (**I**). The switch is on the front panel of the plasma power supply.

- If the torch-lock switch is set to the green “ready to fire” (✔) position when you set the power switch to ON, the hand torch puts out a puff of air. Refer to Warning puffs of air on page 52.
- If the torch-lock switch is set to the yellow lock (**X**) position when you set the power switch to ON, the Torch Cap LED on the front panel comes on.

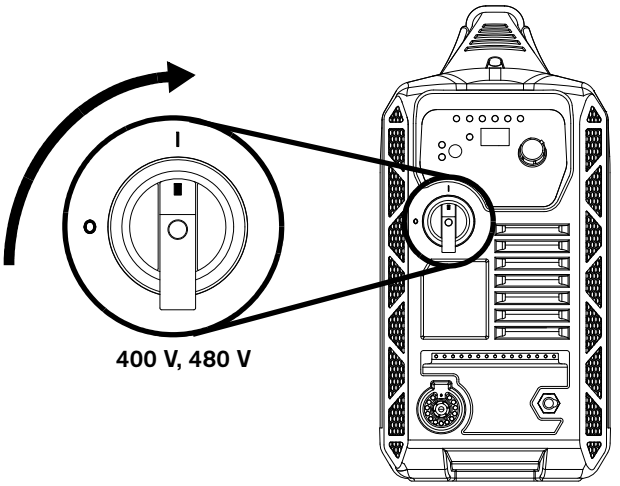

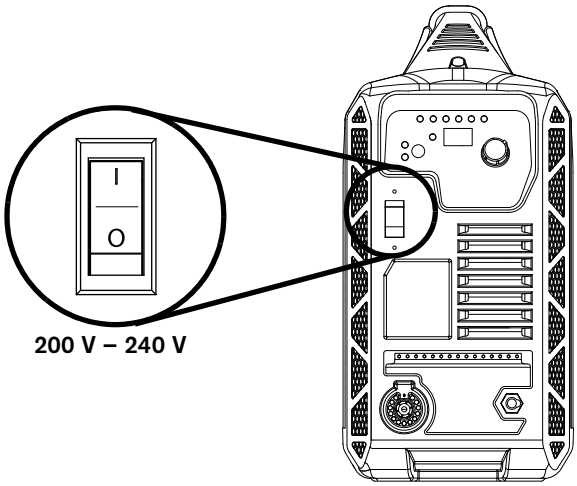

Step 6 – Unlock the SmartSYNC torch

1. Move the torch-lock switch to the green “ready to fire” (✓) position.
2. Pull the torch trigger 1 time to get the warning puffs of air. Refer to Warning puffs of air on page 52.
3. When the warning puffs of air stop, the torch is prepared to fire a plasma arc.

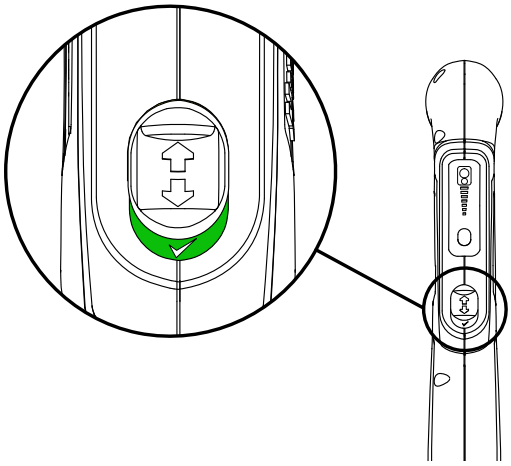

If you see a fault code and fault icon on the control panel, remove the fault condition before you continue. Refer to Fault icons and fault codes on page 96.

Warning puffs of air

The following happens on SmartSYNC hand torches the first time that you try to fire the torch after moving the torch-lock switch to the yellow lock (**X**) position and then back to the green “ready to fire” (✓) position:

1. The plasma arc does not fire.
2. The torch quickly puts out multiple puffs of air. You can feel a light tap in the torch handle with each puff of air.
3. The plasma power supply makes a pressure-release sound that you can hear with each puff of air.

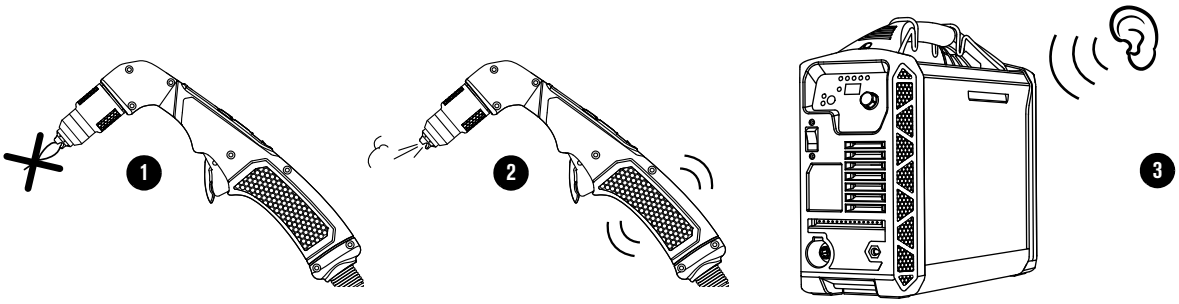

This feedback is a warning. It does not identify a fault condition. **It tells you that the torch is unlocked and will fire a plasma arc the next time that you pull the trigger.**

Change a cartridge

1. Move the torch-lock switch to the yellow lock (**X**) position.
2. Remove the cartridge and install a new one. Refer to Install the cartridge on page 50.
3. Move the torch-lock switch to the green “ready to fire” (✓) position.
4. Pull the torch trigger 1 time to get the warning puffs of air.

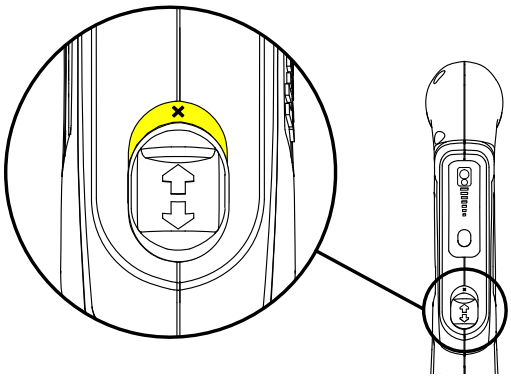

LED behavior during a cartridge change

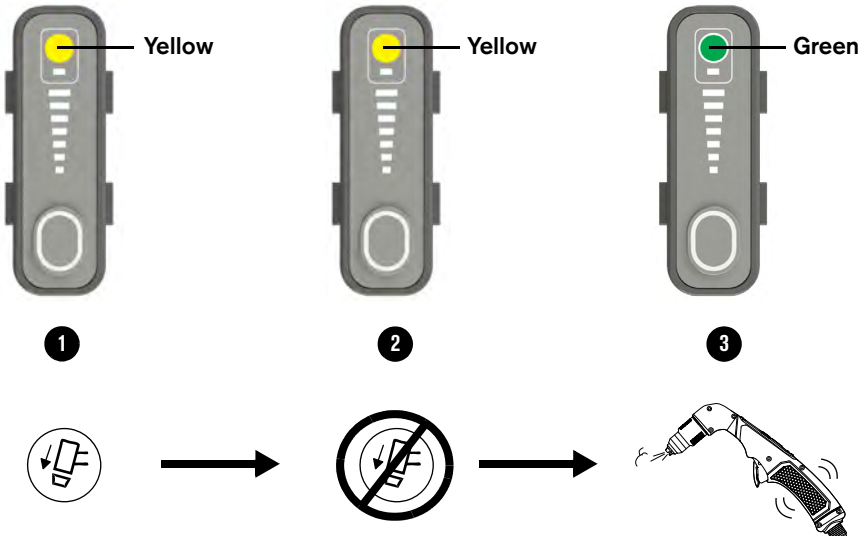

On the plasma power supply:

1. When you set the torch-lock switch to the yellow lock (**X**) position while the plasma power supply is ON, the Torch Cap light-emitting diode (LED) on the front panel illuminates and a 0-50-2 code displays.
2. After you install the cartridge and set the torch-lock switch to the green “ready to fire” (✓) position, the Torch Cap LED extinguishes.
3. **Hand torch:** After the torch puts out the warning puffs of air, the 0-50-2 code extinguishes.

Step 7 – Use the SmartSYNC torch

Use the hand torch

Use the methods in the following sections to cut and gouge correctly:

- Cut and Mark with the Hand Torch on page 63
- Gouge with the hand torch on page 77

What occurs during and after cutting

Temperature control

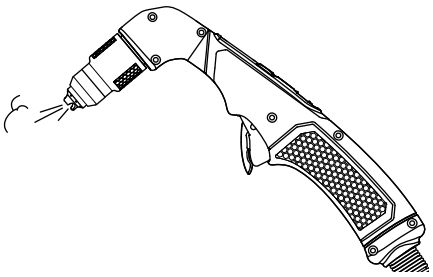

Postflow – After you complete a cut and release the torch trigger, air continues to flow from the torch to decrease the temperature of the cartridge. This is referred to as *postflow*.

Always let postflow complete before you remove a cartridge.

Fan activity – The cooling fan inside the plasma power supply automatically comes on as necessary during and after cutting to decrease the temperature of internal components.

Controls and indicators on the plasma power supply

Cutting and gouging controls

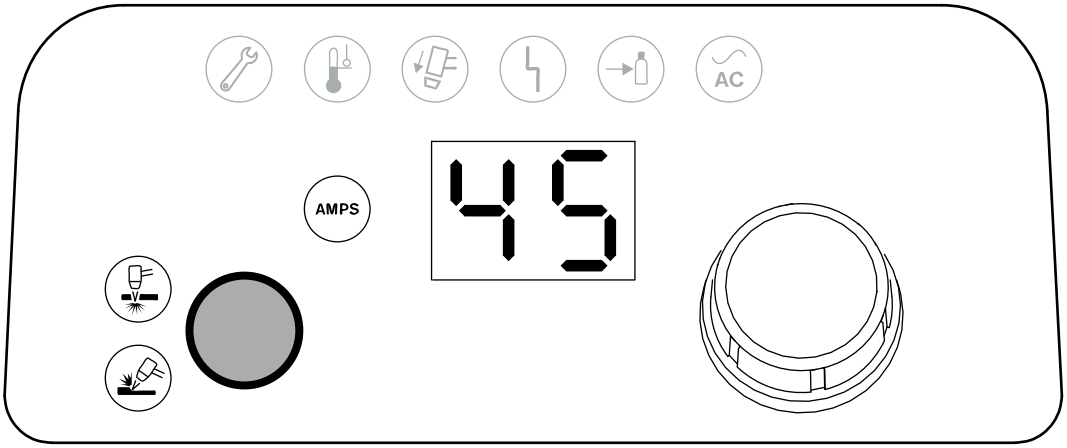

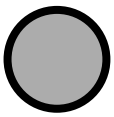

Mode button – Press this button to toggle between cut mode and gouge mode. The system automatically adjusts the gas pressure based on:

- The mode selected
- The torch connected to the power supply
- The length of the torch lead

Cut Mode LED (green) – When illuminated, this LED indicates that the system is ready to perform plasma cutting operations.

Gouge Mode LED (green) – When illuminated, this LED indicates that the system is ready to perform plasma gouging operations.

2-digit display – This display shows the output current by default.

When certain system faults occur, this display shows a fault code. Refer to Fault icons and fault codes on page 96.

If you manually adjust system settings, such as the gas pressure for example, this display shows this information. Refer to Adjust the operating settings manually on page 57.

AMPS LED (green) – When illuminated, this LED indicates that the 2-digit display shows the cutting current (amperage).

When the 2-digit display shows other values, such as gas pressure or a fault code, the AMPS LED is not illuminated.

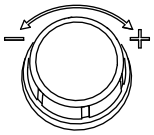

Adjustment knob – Use this knob to set the cutting current between 9 A and 45 A in 1-unit increments.

You can also use this knob to increase or decrease the gas pressure. Refer to Adjust the gas pressure manually on page 59.

Indicator LEDs

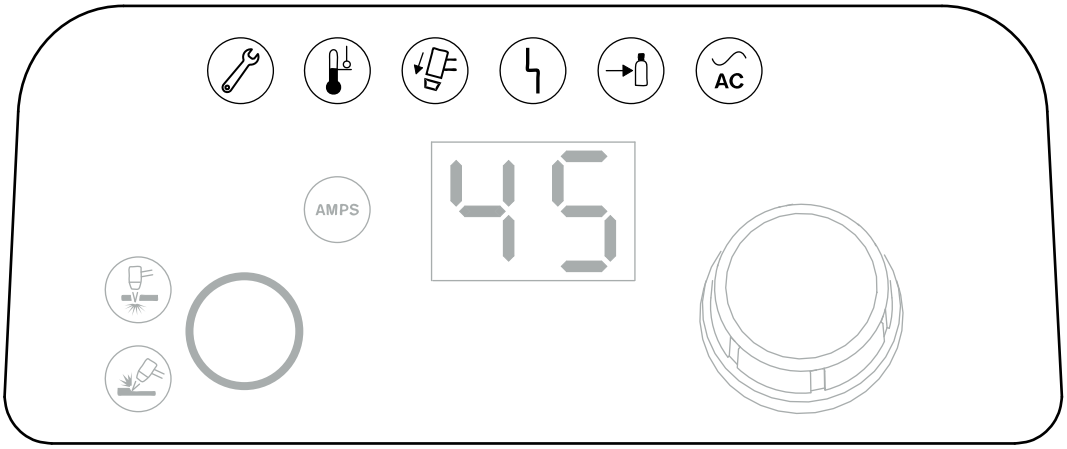

Power ON LED (green)

When illuminated, this LED indicates that the power switch is set to ON (**I**) and the system is ready to cut.

Gas Pressure LED (yellow)

When illuminated, this fault LED indicates that the inlet gas pressure is too low or that there is no inlet gas connection. Refer to Fault icons and fault codes on page 96.

System Fault LED (yellow)

When illuminated, this fault LED indicates that there is a fault with the plasma power supply. In many instances, when this LED illuminates, a fault code also flashes on the 2-digit display. Refer to Fault icons and fault codes on page 96.

Torch Cap LED (yellow)

When illuminated, this fault LED indicates that the consumables are loose, improperly installed, or missing. Refer to Fault icons and fault codes on page 96.

Temperature LED (yellow)

When illuminated, this fault LED indicates that the system's temperature is outside the permitted operating range. Refer to Fault icons and fault codes on page 96.

Service LED

This LED is used by qualified service technicians for troubleshooting the plasma power supply.

Some fault conditions cause multiple LEDs to illuminate or flash at the same time. For information on what these fault conditions are and how to clear them, see Fault icons and fault codes on page 96.

Controls and indicators on the hand torch

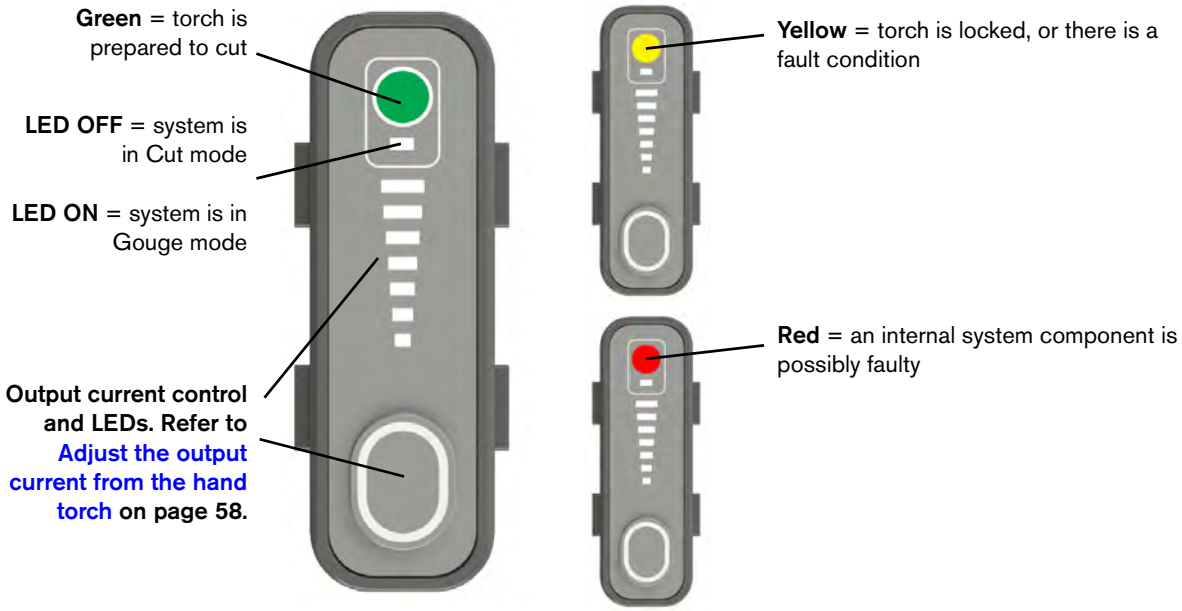

Adjust the operating settings manually

Changing the operating settings from their defaults is recommended only for experienced operators.

The plasma power supply automatically sets the gas pressure and current based on the Hypertherm cartridge type, operating mode, the torch type, and the length of the torch lead.

You can adjust the output current, the gas pressure, or both manually if necessary.

- The plasma power supply keeps the manual settings until you install a different type of Hypertherm cartridge or you install a different torch.
  - If you manually set the operating settings and then replace the Hypertherm cartridge with a new cartridge of the same type, the plasma power supply keeps your settings.

    A *type* of Hypertherm cartridge refers to the cartridge application, such as gouging, standard drag-cutting, FineCut, or mechanized. Each *type* of Hypertherm cartridge has a different part number.

  - The plasma power supply also keeps your settings if you do a quick restart or a cold restart.

Adjust the output current manually

Make sure that the **output current (A)** you select is correct for your cutting or gouging application. For example, an output current that is too low or too high for the material you are cutting may result in poor cut quality.

1. Move the torch-lock switch to the green “ready to fire” (✓) position before you adjust the output current.

2. Turn the adjustment knob ❶ as necessary to set the output current ❷ in increments of 1 A. You can also use the hand torch to set the output current. Refer to Adjust the output current from the hand torch.
   - The mode LED flashes to let you know that the amperage has been manually adjusted. It continues to flash until you reset the current.

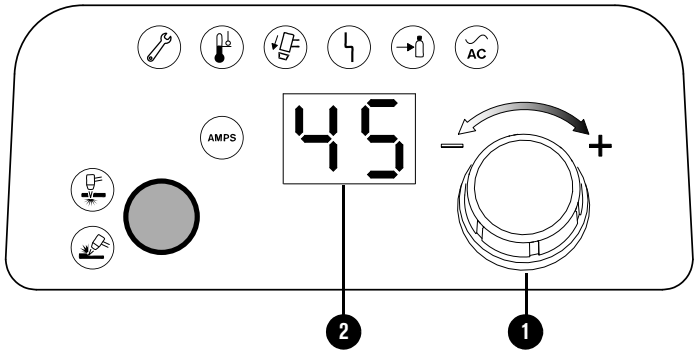

Adjust the output current from the hand torch

1. Push the button on the amperage adjustment control to move the current setting from one preset amperage to another.

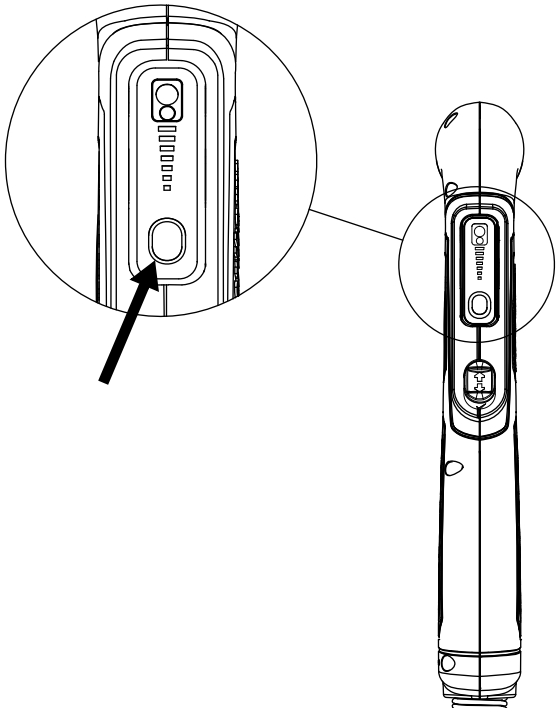

Adjust the gas pressure manually

Make sure that the **gas pressure** you select is correct for your cutting or gouging application.

1. Move the torch-lock switch to the green “ready to fire” (✓) position.
2. Push and hold the Mode button ❶.
3. While holding the Mode button, turn the adjustment knob ❷ to adjust the gas pressure to the necessary level.

   In this example, we decreased the gas pressure to 2.4 bar (35 psi).

   In many conditions, you can increase and decrease the gas pressure by a maximum of 0.7 bar (10 psi). The acceptable range can change if the cartridge you are using has a smaller maximum limit.

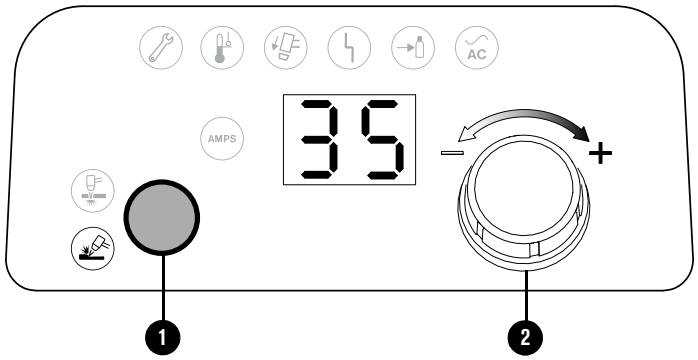

4. Release the **Mode** button.
   - After you release the **Mode** button, the AMPS LED illuminates again, and the 2-digit display changes from gas pressure back to amperage.
   - The selected mode LED ❸ flashes to let you know that the gas pressure has been manually adjusted. It continues to flash until you reset the pressure.
   - To see the gas pressure setting again, repeat step 2.

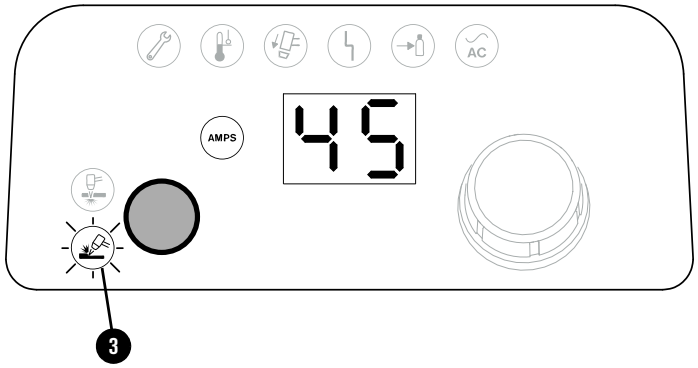

Go back to automatic settings mode

To go back to automatic settings mode, push the Mode button ❶. The selected mode LED ❷ next to the button stops flashing.

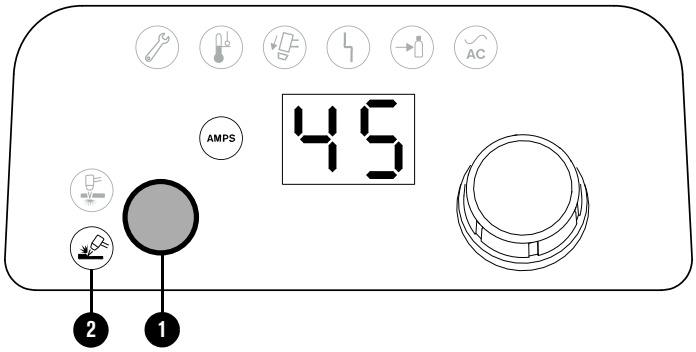

- When you change **from manual gas pressure mode to automatic gas pressure mode**:
  - The plasma power supply automatically sets the gas pressure related to the Hypertherm cartridge.
  - The amperage setting stays the same.
- When you change **from automatic gas pressure mode to manual gas pressure mode**:
  - The plasma power supply uses the last manual gas pressure that you set.
  - The amperage setting stays the same.
- When you do a **quick restart or a cold restart of the plasma power supply in manual gas pressure mode**:
  - The plasma power supply keeps the last manual gas pressure and amperage that you set, unless you install a different type of cartridge.
- When you connect a different torch, the plasma power supply returns **to automatic gas pressure mode**.

Monitor cartridge data

Monitor data for individual cartridges

Each Hypertherm cartridge contains data about how it has been used. You can monitor this data if necessary using the Hypertherm Cartridge Reader kit (528083). For example, you can compare data between Hypertherm cartridges if one cartridge had significantly better life than a different cartridge, or if you want to calculate the average cartridge life over a period of time.

Prevent overheating

The duty cycle ratings help you to know how to operate a Powermax system without overheating it.

Duty cycle – Percentage of time during a 10-minute interval that a plasma arc can stay on without causing the plasma power supply to overheat.

Output current	Duty cycle*
45 A	50%
41 A	60%
32 A	100%

* If the ambient operating temperature is 40°C (104°F).

If the plasma power supply overheats, the following occurs:

- The plasma arc stops.
- The temperature fault icon comes on.
- The cooling fan inside the plasma power supply continues to operate.

When the plasma power supply overheats, you must:

- Leave the plasma power supply on to let the fan cool the plasma power supply.
- Wait for the temperature fault icon to go off before you start to cut again.

Decrease arc stretch

Stretching the plasma arc for long periods decreases the duty cycle. Whenever possible, drag the torch on the workpiece. Refer to Start a cut from the edge of the workpiece on page 68.

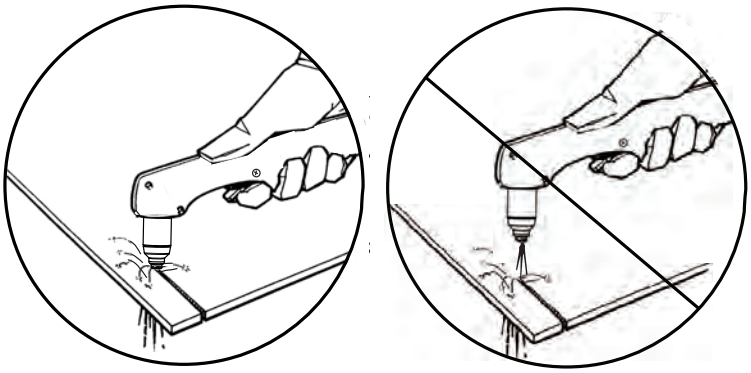

If you operate the plasma power supply on a lower rated electrical service, stretching the plasma arc for long periods can cause the plasma power supply to overheat more quickly and can cause the circuit breaker to open (trip).

4 Cut and Mark with the Hand Torch

This section gives an overview of hand torch parts, dimensions, cartridges, cutting guidelines, basic cutting methods, and marking guidelines.

- For gouging information, refer to Gouge with the Hand Torch on page 77.
- To correct problems with cut quality, refer to Common problems and solutions on page 89.

About the hand torch

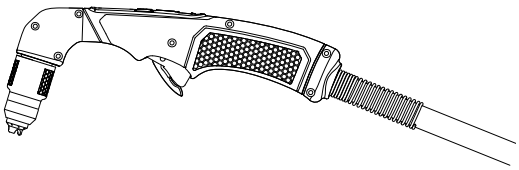

SmartSYNC hand torches come in 75° and 15° models.

- The 75° hand torch is a general purpose torch designed for the widest range of applications.
- The 15° hand torch is designed to point heat away from the operator during gouging. It also makes it easier to cut overhead or in areas that are not easy to reach.

SmartSYNC hand torch features include:

- A control on the torch that lets you adjust the output current (A) from the torch (refer to page 58)
- Automatic setting of operating mode, amperage, and gas pressure related to the Hypertherm cartridge that you install, the torch type, and the torch lead length
- Communication of cartridge information to the plasma power supply, such as cartridge type
- A torch-lock switch that prevents the torch from firing accidentally, even when the plasma power supply is ON (Refer to Step 6 – Unlock the SmartSYNC torch on page 52.)
- The FastConnect quick-disconnect system that lets you easily remove and change torches

For information about the thicknesses you can cut and pierce with a SmartSYNC hand torch, refer to Cutting specifications on page 25.

Select the correct cutting cartridge

Hypertherm offers the following types of hand-cutting cartridges, which can be used with both the 15° and the 75° SmartSYNC hand torches:

Cartridge Type	Purpose
Drag-cutting (yellow)	Use these cartridges to drag the torch on the workpiece (drag-cut) for the widest range of cutting applications.
FineCut® hand (yellow)	Use these cartridges to get a narrower kerf on thin mild steel and stainless steel up to 3 mm (10 gauge). Also use this cartridge to mark mild steel, stainless steel, and aluminum. Refer to Mark with the hand torch on page 72.

- For a full list of the cutting and gouging cartridges available, refer to the *Powermax45/65/85/105 SYNC Parts Guide* (810490).
- If your preference is to keep a standoff while cutting, you can use the gray mechanized cutting cartridges on your SmartSYNC hand torch.
- For information on gouging processes and cartridges, refer to Gouge with the Hand Torch on page 77.

For help installing the cartridge, refer to Step 4 – Install the cartridge on page 48.

Prepare to fire the torch

⚠ WARNING

INSTANT-ON TORCHES – PLASMA ARC CAN CAUSE INJURY, BURNS

Ignition of the plasma arc occurs immediately when you pull the torch trigger. Before changing the cartridge, one of the following steps is necessary. Whenever possible, complete the first step.

- Set the power switch on the plasma power supply to OFF (**O**).

  OR

- Move the torch-lock switch to the yellow lock (**X**) position. Pull the trigger to make sure that the torch does not fire a plasma arc.

⚠ WARNING

INSTANT-ON TORCHES – STAY CLEAR OF PLASMA ARC

The plasma arc will cut quickly through gloves and skin.

- Put on the correct and approved protective equipment.
- Keep hands, clothing, and objects away from the torch tip.
- Do not hold the workpiece. Keep your hands clear of the cutting path.
- Never point the torch toward yourself or others.

⚠ WARNING

RISK OF BURNS AND ELECTRIC SHOCK – USE INSULATED GLOVES

Always put on insulated gloves when changing the cartridges. The cartridges get very hot during cutting and can cause severe burns.

Touching the cartridges can also cause electric shock if the plasma power supply is ON and the torch-lock switch is not in the yellow lock (**X**) position.

To prevent accidental firing, the hand torch has a torch-lock switch and a safety trigger. To fire the torch, do the following:

1. Install the correct cartridge. Refer to Step 4 – Install the cartridge on page 48.

   When you install a Hypertherm cutting cartridge, the system goes to **Cut mode** .

   When you install a cutting cartridge, Gouge mode is not available.

2. Make sure that the torch-lock switch is in the green “ready to fire” (✓) position.

   The first time that you pull the torch trigger after you set the torch to the “ready to fire” position, multiple puffs of air quickly come from the torch. This is a warning that the torch is active and will fire an arc the next time that you pull the trigger. Refer to Warning puffs of air on page 52.

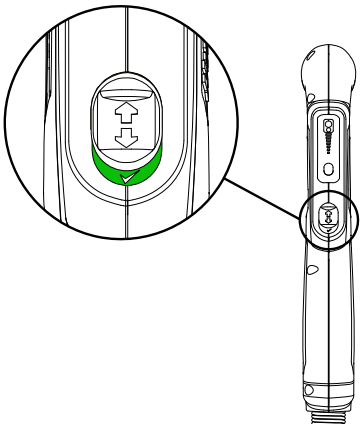

3. Flip the trigger’s safety cover forward (toward the torch head) and pull the red torch trigger.

   After you complete a cut and release the torch trigger, air continues to flow from the torch to decrease the temperature of the cartridge. This is referred to as *postflow*.

   Always let postflow complete before you remove a cartridge.

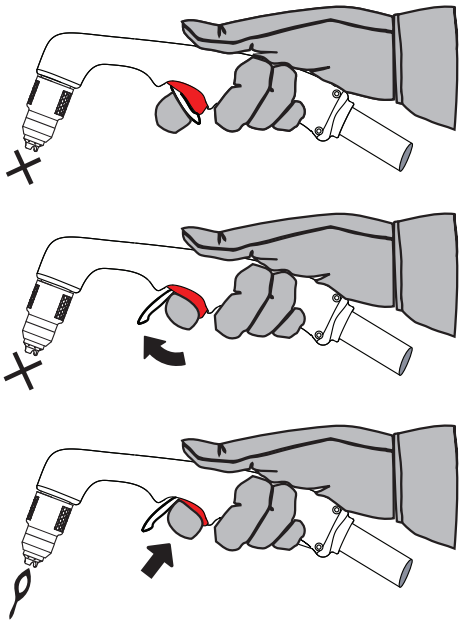

Start a cut from the edge of the workpiece

Slag produced during piercing can cause damage to the tip of the cartridge. Start the cut from the edge of the workpiece, when possible, to decrease this damage and to optimize cartridge life.

1. With the work clamp attached to the workpiece, hold the torch tip perpendicular (90°) to the edge of the workpiece.

2. Pull the torch's trigger to start the arc. Stay at the edge until the arc has cut completely through the workpiece.

3. Drag the torch lightly across the workpiece to continue with the cut. Keep a smooth, stable pace.

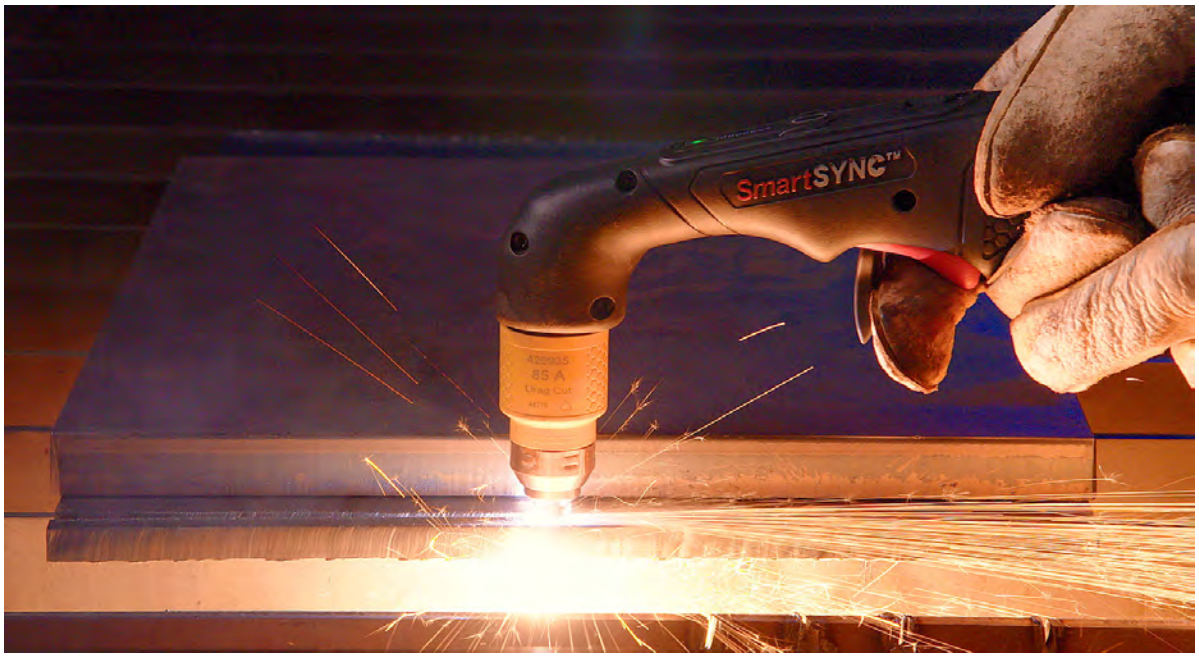

Pierce a workpiece

⚠ WARNING

SPARKS AND HOT METAL CAN INJURE EYES AND BURN SKIN

When firing the torch at an angle, sparks and hot metal will spray out from the torch tip. Point the torch away from yourself and others. Always put on correct protective equipment including gloves and eye protection.

The hand torch can pierce interior features on metal. The type of pierce that you do relates to the thickness of the workpiece and the pierce capacity of the Powermax45 SYNC. Refer to Pierce capacity on page 25.

- **Straight pierce** – Use a straight pierce to cut a workpiece that is thinner than 8 mm (5/16 inch). If a straight pierce does not pierce the workpiece, try a rolling pierce.
- **Rolling pierce** – Use a rolling pierce to cut a workpiece that is 8 mm (5/16 inch) or thicker, or if a straight pierce does not pierce the workpiece.

1. Attach the work clamp to the workpiece.
2. **Straight pierce:** Hold the torch perpendicular (90°) to the workpiece.

   Rolling pierce: Hold the torch at an approximate 30° angle to the workpiece with the torch tip touching the workpiece before firing the torch.

3. **Straight pierce:** Pull the torch trigger to start the arc.

   Rolling pierce: Pull the torch trigger to start the arc while still at an angle to the workpiece ①, then move the torch up ② to the perpendicular (90°) position ③.

4. Hold the torch in position while continuing to pull the trigger. When sparks are coming from below the workpiece, the arc has pierced the material.

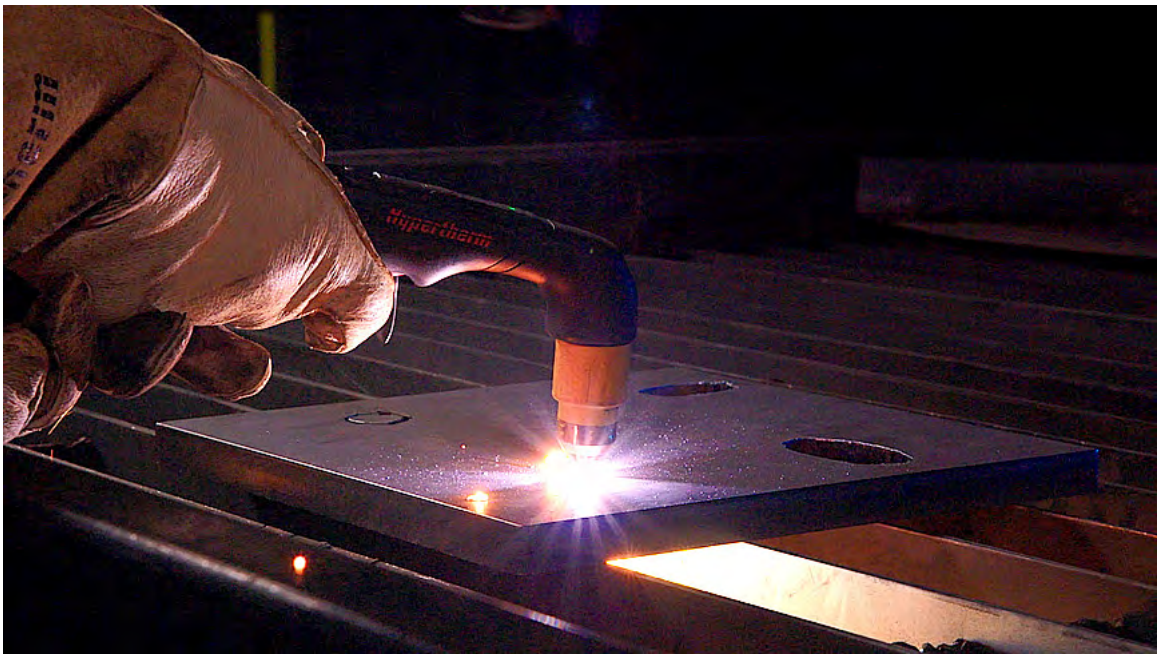

5. When the pierce is complete, drag the torch tip lightly across the workpiece to continue with the cut.

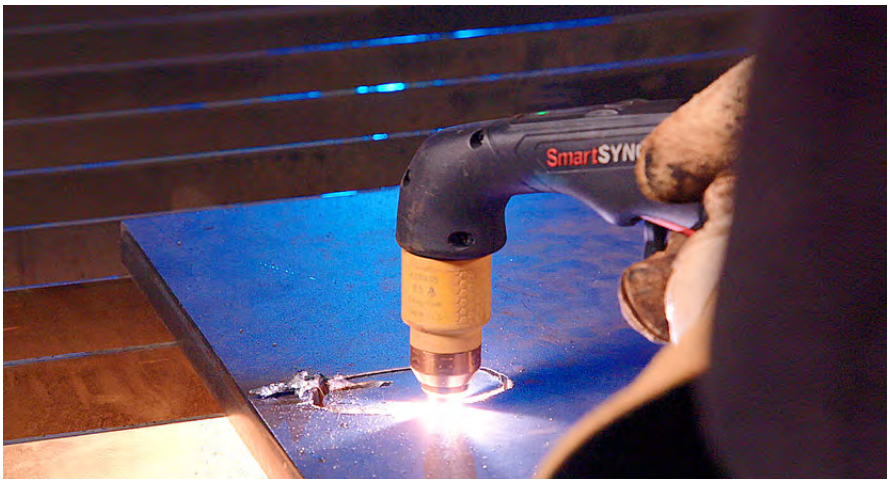

Guidelines for hand torch cutting

- Drag the torch tip lightly and smoothly across the workpiece to keep a stable cut.

  Sometimes the torch sticks slightly to the workpiece when you cut with FineCut cartridges. This is not an indication of a problem.

- Pulling, or dragging, the torch across the cut is easier than pushing it.
- If sparks spray up from the workpiece, move the torch more slowly, or set the output current higher.
- While cutting, make sure that sparks are coming from the bottom of the workpiece. When cutting correctly, the sparks lag slightly behind the torch as you cut (15° – 30° angle from vertical).
- Hold the torch tip perpendicular to the workpiece so that the head of the torch is at a 90° angle to the cutting surface ❶. Observe the cutting arc as the torch cuts.
- If you fire the torch unnecessarily ❷, you shorten the life of the cartridge.
- For straight-line cuts, use a straight edge as a guide. To cut circles, use a template or a radius cutter attachment (a circle cutting guide). For beveled cuts, use a bevel cutting guide. Refer to the *Powermax45/65/85/105 SYNC Parts Guide* (810490).

  To troubleshoot problems with cut quality, refer to Common problems and solutions on page 89.

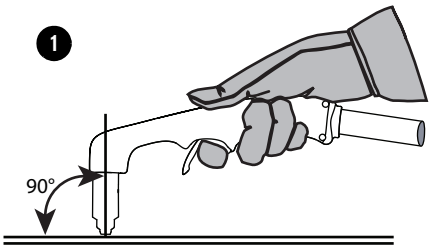

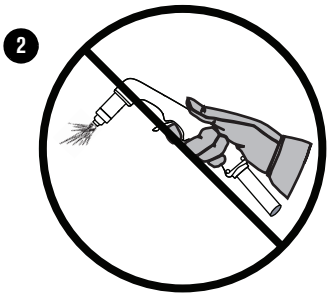

Mark with the hand torch

You can mark mild steel, stainless steel, and aluminum by using a FineCut cartridge with bottled air or shop-compressed air.

Marking process guidelines

Before you begin marking:

- Install a FineCut cartridge.
  - Marking is only possible with a FineCut cartridge.
- Set the plasma power supply output current to 9 A through 19 A.
  - A current setting of 9 A will give you the lightest mark. A current setting of 19 A will give the heaviest mark.

Additional considerations:

- You can vary the depth and width of marks by varying torch speed, output current, and torch to workpiece height.

  You cannot manually adjust the gas pressure when the plasma power supply is in marking mode.

Get the most out of your cartridges

How often it is necessary to change the cartridge on your hand torch relates to the following:

- **Gas supply quality**
  - It is extremely important to keep the gas supply line clean and dry. Oil, water, vapor, and other contamination in the gas supply can decrease cut quality and cartridge life. Refer to Gas supply source on page 39 and Add more gas filtration on page 41.
- **Cutting technique**
  - Whenever possible, start cuts from the edge of the workpiece. This helps to extend the life of the cartridge. Refer to Start a cut from the edge of the workpiece on page 68.
  - Use the correct piercing method for the thickness of the workpiece that you are cutting. In many conditions, a rolling pierce method is an efficient way to pierce the workpiece while you decrease the cartridge wear that naturally occurs during piercing. Refer to Pierce a workpiece on page 70 for an explanation of the straight pierce and rolling pierce methods and when to use each.
- **Thickness of the workpiece being cut**
  - In general, the thicker the workpiece being cut, the more quickly the cartridges become worn. For best results, 80% of the workpieces that you cut should be equal to or less than the thickness specified for this system and cartridge. Refer to Cutting specifications on page 25.
  - In general, do not cut material that is thicker than what is specified for this system and cartridge.
- **Expanded metal cutting and pilot arc time**
  - Expanded metal has a slotted or mesh pattern. Cutting expanded metal wears out cartridges more quickly because it requires a continuous pilot arc. A pilot arc occurs when the torch is fired but the plasma arc is not in contact with the workpiece.
  - Fire the torch only when necessary to keep pilot arc time to a minimum.
  - Frequent pilot arcs cause the nozzle in the cartridge to wear more quickly. You can see the cumulative pilot arc time for a cartridge using the Hypertherm Cartridge Reader kit (528083).
- **Arc stretch when cutting**
  - To get maximum cartridge life, only stretch the arc when it is necessary. Drag the torch on the workpiece whenever possible. Refer to Guidelines for hand torch cutting on page 72.

  During standard hand cutting with Powermax45 SYNC systems under lab conditions, Hypertherm got 1 to 3 hours of actual “arc on” time.

Signs that a cartridge is near end-of-life

Usually, the best indication of when to install a new cartridge is when the cut quality is no longer satisfactory. When it is necessary to replace a cartridge, replace the full cartridge with a new one. **Do not try to disassemble the cartridge.**

Figure 2 – Cartridge components

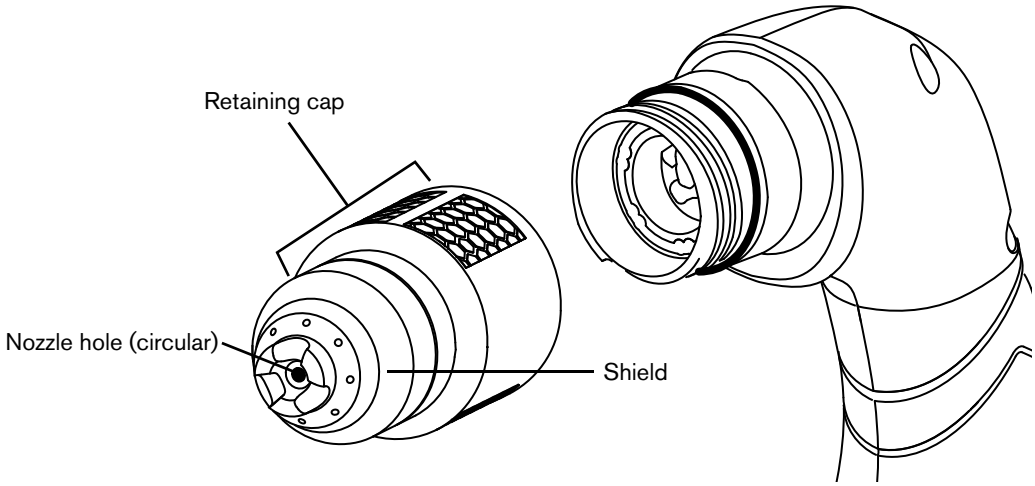

The following signs can be indications that a cartridge is near or at end-of-life:

- **Examine the nozzle hole.** A nozzle hole in good condition is circular. If the nozzle hole is not circular, replace the cartridge.
- **Look for a higher rate of torch stuck open (TSO) or a torch stuck closed (TSO) errors.** As a cartridge wears, unwanted material can collect inside the cartridge and cause 0-30-0 faults to occur. Refer to page 96. In some conditions, you can remove this material by carefully shaking the cartridge.
- **Examine the crown ❶.** The crown is the square copper piece inside of the cartridge. Push down the crown and then release the spring tension.

  A crown in good condition goes back to its start position. If the crown stays in the down position, carefully shake the cartridge. If the crown continues to stay in the down position, replace the cartridge.

If you do a lot of piercing, it is possible to see black marks on the retaining cap. Usually this is not a sign that the cartridge is at end-of-life. Continue to cut with the cartridge until the cut quality is no longer satisfactory.

Hand torch components, dimensions, and weights

Components

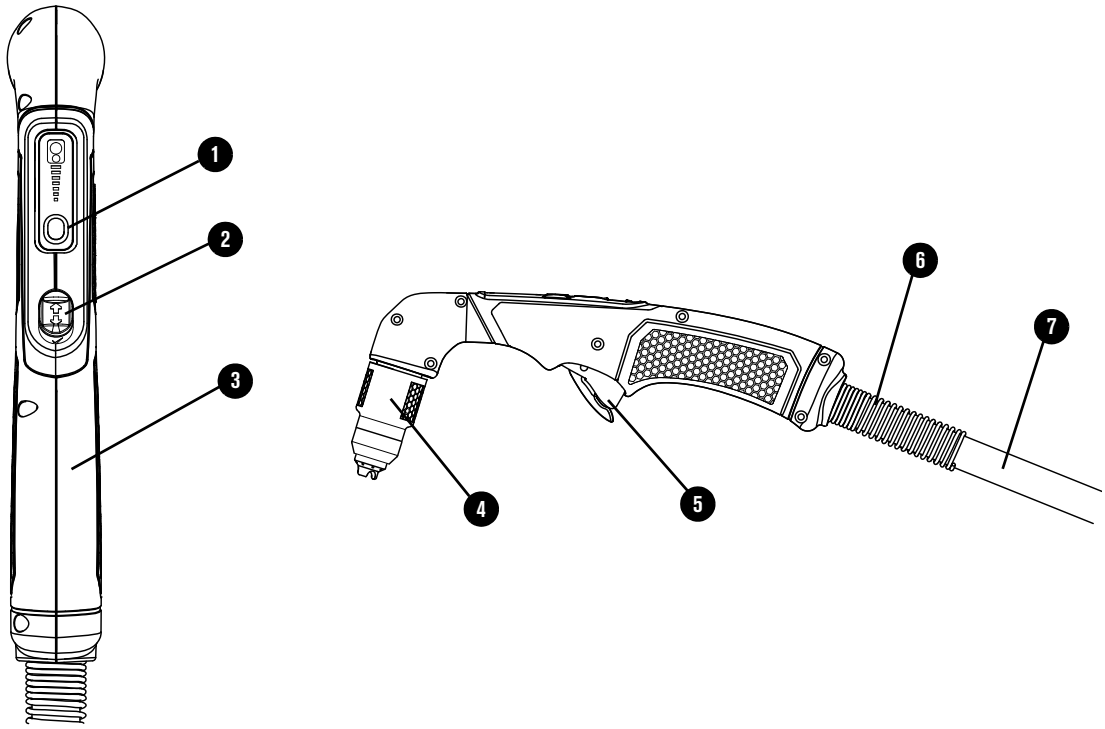

1 Amperage-adjustment control
2 Torch-lock switch
3 Shell
4 Cartridge
5 Safety trigger
6 Strain relief for torch lead
7 Torch lead

Dimensions

75° torch

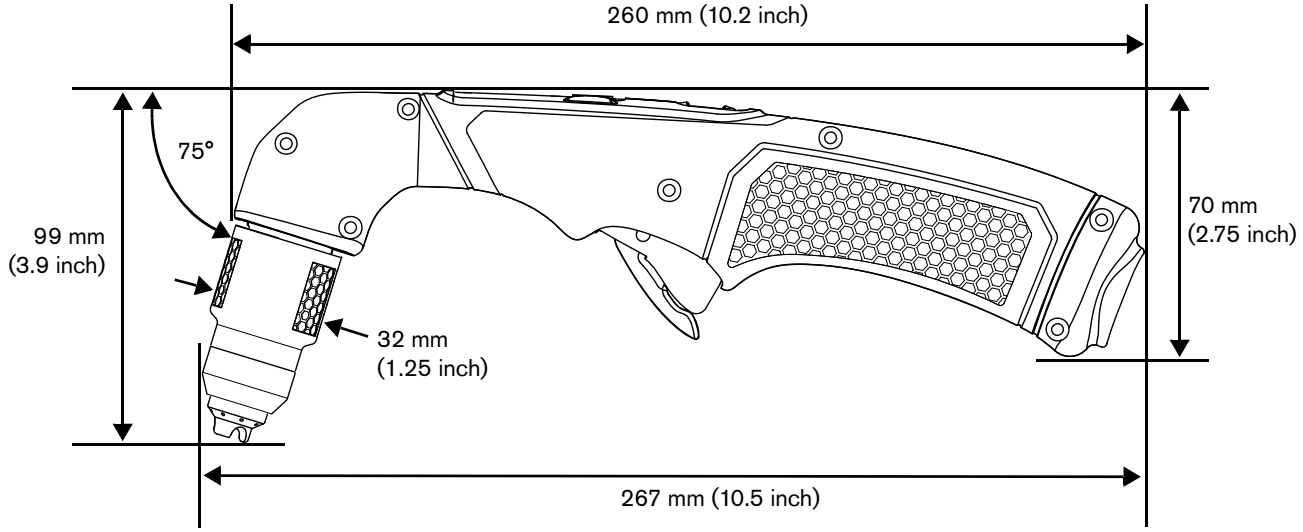

15° torch

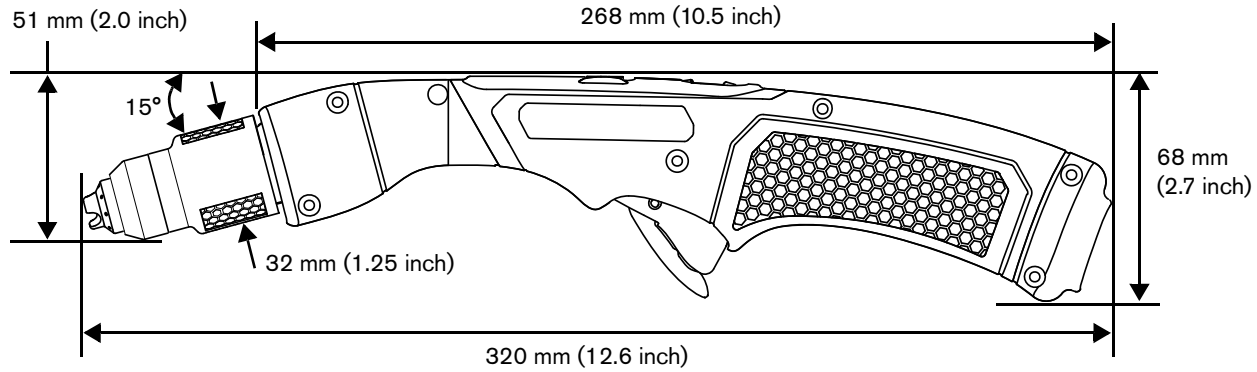

Weights

Torch	Weight*
Hand torch with 7.6 m (20 foot) lead	2.4 kg (5.2 lb)

* Without a cartridge installed.

5 Gouge with the Hand Torch

Gouge with the hand torch

⚠ WARNING

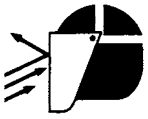

SPARKS AND HOT METAL CAN INJURE EYES AND BURN SKIN

When firing the torch at an angle, sparks and hot metal will spray out from the torch tip. Point the torch away from yourself and others. Always put on correct protective equipment including gloves and eye protection.

Hypertherm offers the following gouging cartridge, which you can use with both the 15° and the 75° SmartSYNC hand torches.

Cartridge Type	Purpose
Maximum Removal gouging (green)	Use these cartridges for aggressive metal removal, deep gouge profiles, and extreme metal washing. A faster gouging speed is recommended to control the concentrated plasma arc.

For a full list of cartridges available for the Powermax45 SYNC, refer to the *Powermax45/65/85/105 SYNC Parts Guide* (810490).

Prepare to fire the torch

⚠ WARNING

INSTANT-ON TORCHES – PLASMA ARC CAN CAUSE INJURY, BURNS

Ignition of the plasma arc occurs immediately when you pull the torch trigger. Before changing the cartridge, one of the following steps is necessary. Whenever possible, complete the first step.

- Set the power switch on the plasma power supply to OFF (**O**).

  OR

- Move the torch-lock switch to the yellow lock (**X**) position. Pull the trigger to make sure that the torch does not fire a plasma arc.

⚠ WARNING

INSTANT-ON TORCHES – STAY CLEAR OF PLASMA ARC

The plasma arc will cut quickly through gloves and skin.

- Put on the correct and approved protective equipment.
- Keep hands, clothing, and objects away from the torch tip.
- Do not hold the workpiece. Keep your hands clear of the cutting path.
- Never point the torch toward yourself or others.

⚠ WARNING

RISK OF BURNS AND ELECTRIC SHOCK – USE INSULATED GLOVES

Always put on insulated gloves when changing the cartridges. The cartridges get very hot during cutting and can cause severe burns.

Touching the cartridges can also cause electric shock if the plasma power supply is ON and the torch-lock switch is not in the yellow lock (**X**) position.

To prevent accidental firing, the hand torch has a torch-lock switch and a safety trigger. To fire the torch, do the following:

1. Install the gouging cartridge. Refer to Step 4 – Install the cartridge on page 48.

   When you install a Hypertherm gouging cartridge, the system goes to **Gouge mode** .

   When you install a gouging cartridge, Cut mode is not available.

2. Make sure that the torch-lock switch is in the green “ready to fire” (✓) position.

   The first time that you pull the torch trigger after you set the torch to the “ready to fire” position, multiple puffs of air quickly come from the torch. This is a warning that the torch is active and will fire an arc the next time that you pull the trigger. Refer to Warning puffs of air on page 52.

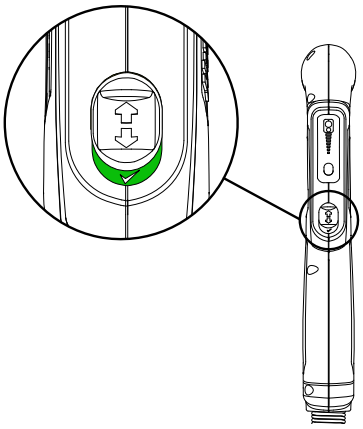

3. Flip the trigger’s safety cover forward (toward the torch head) and pull the red torch trigger.

   After you complete a gouge and release the torch trigger, air continues to flow from the torch to decrease the temperature of the cartridge. This is referred to as *postflow*.

   Always let postflow complete before you remove a cartridge.

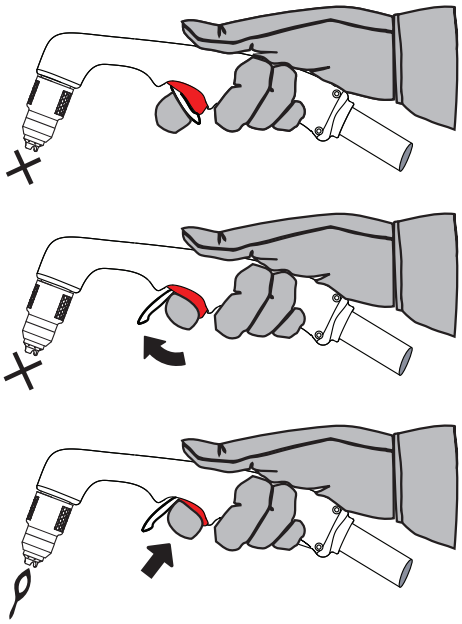

Start a gouge at an angle to the workpiece

1. Before firing the torch, hold the torch at approximately a 40° – 45° angle to the workpiece with the torch tip approximately 6 mm – 12 mm (1/4 in. – 1/2 in.) from the workpiece.

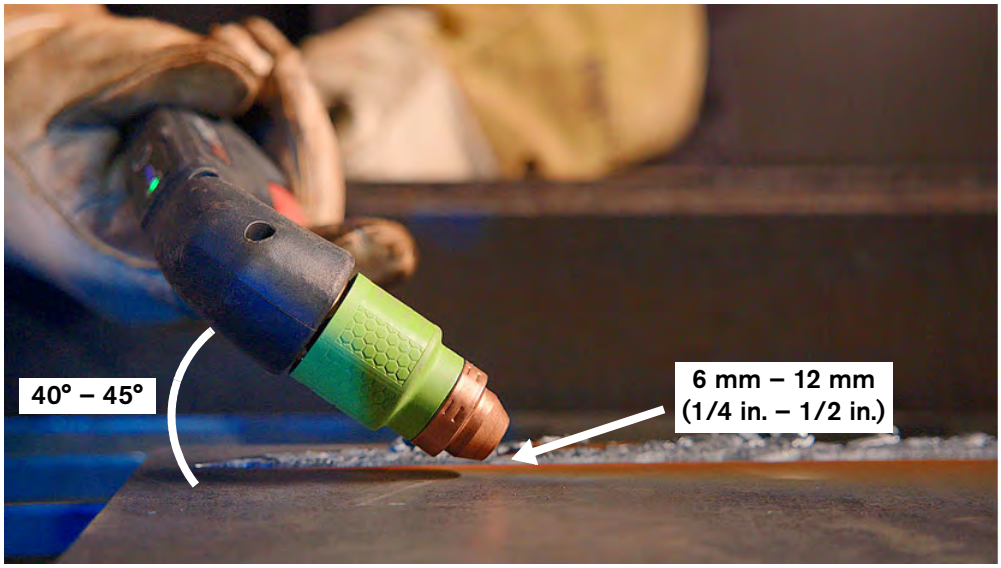

2. Pull the trigger to get a pilot arc. Transfer the arc to the workpiece.
3. Stretch the arc to 25 mm – 32 mm (1 in. – 1-1/4 in.).

4. Keep this position as you push the plasma arc in the direction of the gouge that you want to create.

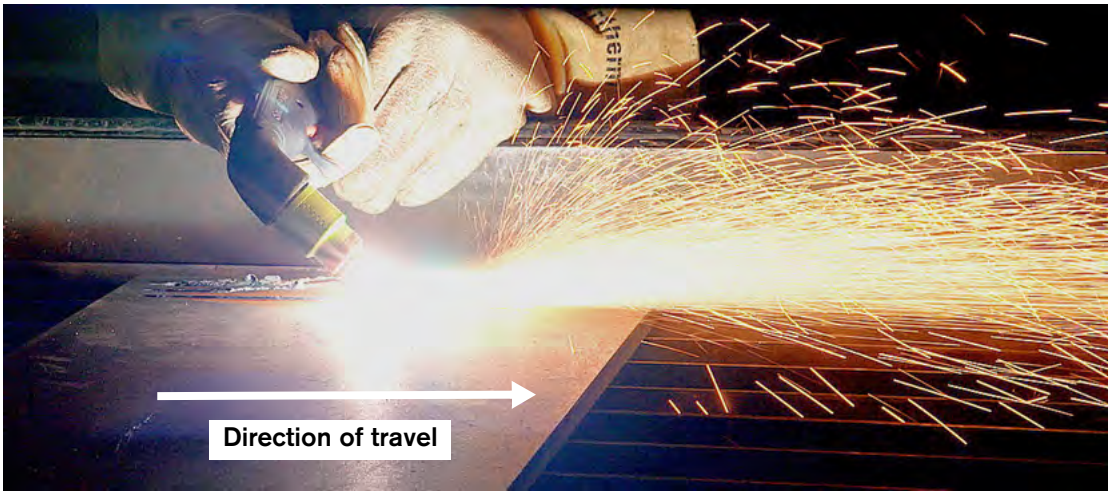

5. Change the position of the torch as necessary to get the gouge contour that you want. Refer to Guidelines for hand torch gouging on page 82. Keep at least a small distance between the torch tip and the molten metal to increase cartridge life and prevent damage to the torch.

Guidelines for hand torch gouging

The width and the depth of the gouge contour are a result of the following factors. **Adjust these factors in combination to get the gouge that you want.**

Change the output current (A) of the plasma power supply

- Decrease the amperage on the front panel to make the gouge narrower and shallower ❶. Increase the amperage to make the gouge wider and deeper ❷.

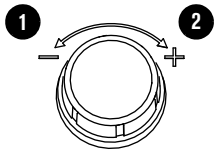

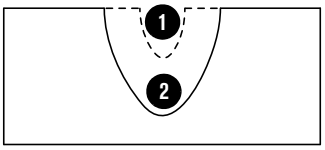

  - Arc stretch is related to the output current (A) of the plasma power supply. The higher the amperage, the longer that you can stretch the arc. Hypertherm recommends that you keep amperage and arc stretch consistent.

Change the angle of the torch to the workpiece

- Put the torch in a more upright position to make the gouge narrower and deeper ❶. Tilt the torch down so that it is closer to the workpiece to make the gouge wider and more shallow ❷.

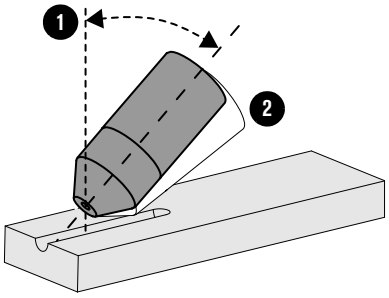

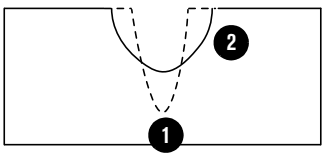

Change the turn of the torch

- Move the torch left or right relative to the torch center line ❶ to make the gouge flatter and steeper on one side ❷.

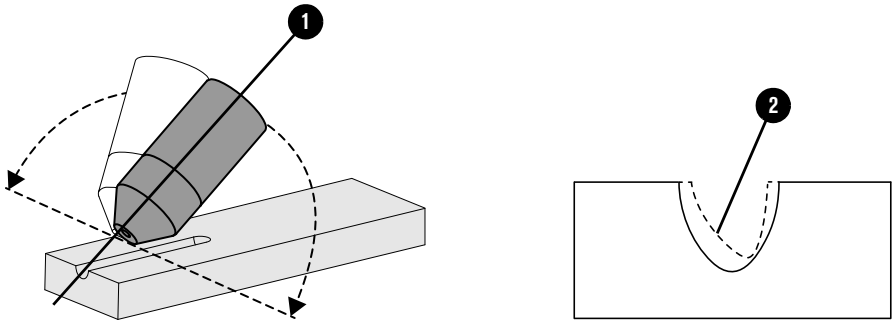

Change the torch-to-work standoff / arc stretch

- Move the torch away from the workpiece to make the gouge wider, shallower, and smoother on the bottom ❶. Move the torch closer to the workpiece to make the gouge narrower and deeper ❷.

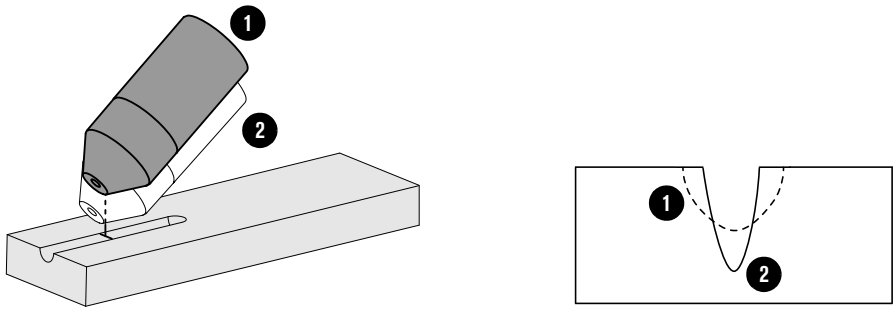

  - Arc stretch is related to the output current (A) of the plasma power supply. The higher the amperage, the longer that you can stretch the arc. Hypertherm recommends that you keep amperage and arc stretch consistent.
  - Keep at least a small distance between the torch tip and the molten metal to increase cartridge life and prevent damage to the torch.

Change the speed of the torch

- Increase the speed of the torch movement to make the gouge narrower and more shallow ❶. Decrease the speed of the torch movement to make the gouge wider and deeper ❷.

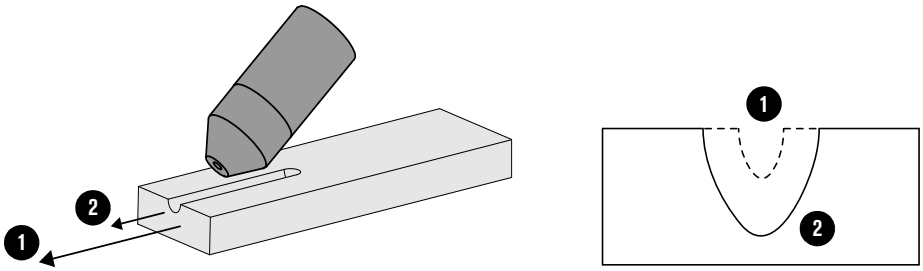

6 Troubleshoot Common Problems

⚠ WARNING

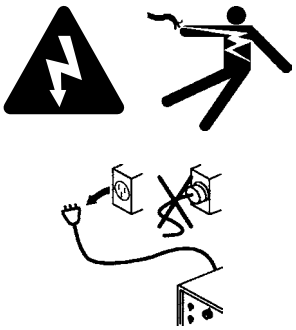

ELECTRIC SHOCK CAN KILL

Disconnect electric power before doing installation or maintenance. You can get a serious electric shock if electric power is not disconnected. Electric shock can seriously injure or kill you.

All work that requires removal of the plasma power supply outer cover or panels must be done by a qualified technician.

Refer to the *Safety and Compliance Manual* (80669C) for more safety information.

⚠ WARNING

INSTANT-ON TORCHES – PLASMA ARC CAN CAUSE INJURY, BURNS

Ignition of the plasma arc occurs immediately when you pull the torch trigger. Before changing the cartridge, one of the following steps is necessary. Whenever possible, complete the first step.

- Set the power switch on the plasma power supply to OFF (**O**).

  OR

- Move the torch-lock switch to the yellow lock (**X**) position. Pull the trigger to make sure that the torch does not fire a plasma arc.

Start here: troubleshooting checklist

When a problem occurs, go through the troubleshooting checklist first. It is necessary to complete these steps before doing the recommendations in the rest of this chapter.

As you do this checklist, record any problems or questions. If you cannot find a solution to the problem by complying with the recommendations in this chapter, or if more aid is necessary, follow these steps:

1. Get the serial number for your system from the data plate that is on the bottom of the plasma power supply.
2. Speak to your Hypertherm distributor or authorized repair facility.
3. Speak to the nearest Hypertherm office shown in the front of this manual.

Refer to the *Powermax45/65/85/105 SYNC Parts Guide* (810490) for information on common replacement parts.

Examine the power source	
☐	Can the power source supply sufficient power to the plasma power supply for the applications that you are doing? If you are using a generator, make sure that it has sufficient power to let you do a full plasma arc stretch. Refer to Use a generator (if necessary) on page 36.
☐	Are the circuit breakers or fuses sufficient for your plasma power supply and for the applications that you are doing? Refer to page 31.
☐	Did the circuit breaker open (trip)?

Examine the plasma power supply	
☐	Is the plasma power supply in an upright position on a flat, level surface?
☐	Does the plasma power supply have sufficient ventilation (approximately 0.25 m or 10 inches of clearance on all sides)?
☐	Are the louvers in the plasma power supply cover blocked?
☐	Is the power switch on the front panel of the plasma power supply operating correctly?
☐	Is there any visible damage to the plasma power supply?

Examine the front panel controls	
☐	Is the fault LED on? Does a fault code and fault icon show on the status screen? Is the AC LED flashing? Refer to page 96.

Examine the power cord*	
☐	Is the power cord plugged in? Or is it connected correctly to a line-disconnect switch or other power source?
☐	Is there any visible damage to the power cord? Are any wires exposed or frayed?
☐	Examine the power cord wires in the power plug or line-disconnect box. Are any of the wires short-circuited?
☐	Is the power plug correct for the power cord? For example, do not install a 1-phase power *plug* on a 3-phase power *cord*. Refer to Prepare the power cord and plug on page 35.
☐	Is the power cord ground wire connected to ground in the plasma power supply and in the power plug or line-disconnect box?
☐	Are the rest of the power cord wires connected correctly in the plasma power supply and in the power plug or line-disconnect box? Refer to page 35.
☐	Are the power cord wires fully tightened inside the plasma power supply and in the power plug or line-disconnect box?

* Make sure that any changes to the plasma power supply or power cord are done by a licensed electrician.

Examine the work lead and work clamp	
☐	Is the work lead connected correctly to the plasma power supply? Make sure that you turn the connector clockwise approximately 1/4 turn until the connector is fully engaged in the lock position. Refer to page 47.
☐	Examine the work lead. Are any wires exposed or frayed? Is the lead twisted or kinked?
☐	Is the work clamp connected to the workpiece that you are cutting?
☐	Does the work clamp have good metal-to-metal contact? If not, remove any rust, paint, or other debris to give a clean surface for a better connection.

Examine the torch and torch lead	
☐	Is the torch lead connected correctly to the plasma power supply? Refer to page 46. The torch lead connector makes a click when it is fully connected.
☐	Examine the torch lead. Are any wires exposed or frayed? Is the lead twisted or kinked?
☐	Examine the torch handle or shell. Are any wires exposed? Are there any other signs of damage to the shell?
☐	Is the status LED on the torch solid yellow or red? Is the status LED flashing yellow? Refer to page 57.
☐	Are there any signs of damage to the torch trigger? Are the trigger and safety latch operating correctly?
☐	Is the torch-lock switch operating correctly? Refer to page 52.

Examine the Hypertherm cartridge	
☐	Is the Hypertherm cartridge worn or damaged? Refer to Signs that a cartridge is near end-of-life on page 74.
☐	Is the Hypertherm cartridge installed correctly? Refer to page 48.
☐	Did you select the correct Hypertherm cartridge for the job that you are doing? Refer to page 65 and page 77.

Examine the gas supply	
☐	Is the gas supply hose connected correctly to the fitting on the rear panel of the plasma power supply?
☐	Is the gas supply hose connected correctly to the air compressor, gas cylinder, or other gas source?
☐	Examine each fitting and connection point in the gas supply line. Are there any signs of leaks?
☐	Is the gas supply hose twisted or kinked? Are there any other signs of damage to the hose?
☐	Is there anything that can be causing the pressure to decrease too much while cutting? For example, is the gas supply hose too long? Are there other devices that use gas from the same source?
☐	Is sufficient gas pressure getting to the plasma power supply? Refer to page 40.
☐	Are you able to keep gas pressure constant while you are cutting? Refer to page 91.

Examine the gas quality	
☐	Examine the whole gas supply line. Are there any signs of contamination, such as from oil, water, or dirt? It is extremely important to keep a clean, dry gas line. Refer to page 92.
☐	Is your air filtration system sufficient to prevent moisture, oil, and other contaminants from getting into the plasma power supply's gas line? Refer to page 92.
☐	Examine the filter element in the plasma power supply's built-in air filter. Is it contaminated? To replace it, refer to page 121.

Common problems and solutions

Problem	Solution
The cut quality is unsatisfactory.	▪ Examine the Hypertherm cartridge. Replace it if it is worn or damaged. Refer to Signs that a cartridge is near end-of-life on page 74 and Cartridge maintenance on page 118. ▪ Make sure that the work lead connection to the plasma power supply is tight. Make sure that there is no damage to the work lead. ▪ Make sure that the torch is being used correctly. Refer to About the hand torch on page 64. ▪ Examine the gas pressure and the gas supply hose. Refer to page 91. ▪ Examine the gas filtration system for signs of contaminants that are possibly causing interference with plasma power supply performance. Refer to page 92. ▪ Adjust the cut speed. ▪ Operate the plasma power supply without using an extension cord. If you must use an extension cord, use a heavy conductor cord of the shortest possible length. Refer to page 36.
The ON / OFF power switch is set to ON (**I**), but the power ON LED (AC) is off.	▪ Make sure that the power cord is connected correctly to the power outlet or line-disconnect switch box. ▪ Make sure that the power is on at the main power panel or at the line-disconnect switch box. ▪ Make sure that the circuit breaker did not open (trip). ▪ Make sure that the line voltage is not too low (more than 15% below the rated voltage). Refer to page 31.
The system changes the gas pressure after I set it manually.	The following conditions cause the system to override a manual gas pressure setting with the default gas pressure setting that matches the type of cartridge installed on the torch: ▪ You install a different type of cartridge. ▪ You adjust the gas pressure while the torch is locked and then you unlock the torch. Go back to manual gas pressure mode, and set the gas pressure again. Make sure that the torch is unlocked before you set the gas pressure. Refer to page 52.
The system changes the output current (A).	▪ Set the torch-lock switch to the “ready to fire” (✓) position *before* you adjust the amperage. The system does not keep the amperage setting while the torch-lock switch is in the yellow lock (**X**) position. When you set the torch-lock switch to the “ready to fire” (✓) position, the system automatically sets the amperage.

Cold restarts and quick restarts

To restart the plasma power supply, set the power switch on the plasma power supply to OFF (**O**) and then set the power switch to ON (**I**).

In some conditions, it is possible that you will be asked specifically to do a “cold restart” or a “quick restart.”

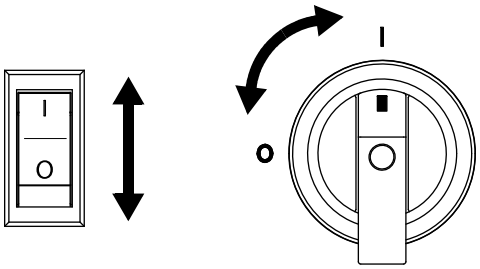

Do a cold restart

1. Set the power switch on the plasma power supply to OFF (**O**).
2. Wait approximately 1 minute or until all of the amperage LEDs on the hand torch go off.
3. Set the power switch on the plasma power supply to ON (**I**).

Do a quick restart

1. Set the power switch on the plasma power supply to OFF (**O**).
2. Immediately set the power switch on the plasma power supply to ON (**I**).

If a fault occurs while you are using a generator, a quick restart does not always remove the fault. Do a cold restart instead.

Examine the gas pressure

- **Inlet gas supply:** Incorrect gas pressure can cause errors that prevent cutting or problems with cut quality. Refer to page 40 for information on the inlet gas supply requirements for this plasma power supply. For optimum system performance, make sure that the inlet gas pressure stays between 7.6 bar – 8.3 bar (110 psi – 120 psi) while gas is flowing. **Never use more than the maximum gas pressure of 9.3 bar (135 psi).**
- **Gas hose:** An incoming gas supply hose with too small a diameter can cause problems with cut quality and cut performance. For gas hoses that are less than 15 m (50 feet), use an internal diameter of 10 mm (3/8 inch) or greater. For gas hoses that are 15 m – 30 m (50 feet – 100 feet), use an internal diameter of 13 mm (1/2 inch) or greater.
- **Pressure setting:** The plasma power supply adjusts gas pressure automatically, but you can adjust the gas pressure manually if necessary. Refer to page 57.

  If you manually adjust the gas pressure and then start to see problems with cut quality or cut performance, set the gas pressure back to the default setting. Refer to page 60.
- **Gas test:** You can do a gas test to see if the plasma power supply's actual output gas pressure is lower than the set pressure by more than an acceptable quantity. The set pressure is the gas pressure that the system sets to align with the type of cartridge and torch installed. Refer to page 109.
- **Pressure gauge:** Install an inline pressure gauge at the gas inlet on the back of the plasma power supply, after all external filtration. Use this gauge to monitor the gas pressure during cutting and when the system is idle. The gas pressure should be stable. For optimum system performance, make sure that the inlet gas pressure stays between 7.6 bar – 8.3 bar (110 psi – 120 psi) while gas is flowing.

Examine the gas quality

It is extremely important to keep a clean, dry gas line to prevent oil, water, dirt, and other contaminants from causing damage to internal components. A clean gas line also helps you to get optimal cut quality and consumable life.

Dirty, oily air is the root cause of many common problems that occur in Powermax plasma power supplies. In some conditions it can void the warranty on the plasma power supply and torch. Refer to the gas quality recommendations in the ratings table on page 19.

The plasma power supply's built-in air filter can remove particulates as small as 5 microns. It can also remove some moisture from the gas supply. But if you work in an environment that is extremely warm and humid, or if work site conditions let oil, vapor, or other contaminants into the gas line, install an external filtration system that cleans the gas supply before it gets into the plasma power supply. Refer to page 41.

NOTICE

DIRTY, OILY AIR CAN CAUSE DAMAGE TO THE AIR FILTER BOWL

Synthetic lubricants containing esters that are used in some air compressors can cause damage to the polycarbonates in the air filter bowl. Add more gas filtration if necessary.

To keep a clean gas line:

1. Examine the air filter element in the plasma power supply's built-in air filter. Replace it if it is dirty. Refer to page 121.

2. Clean the air filter bowl. Remove oil, dirt, and other contaminants.

   A yellow residue on the filter bowl shows that oil is getting into the gas supply line.

3. Examine the O-ring at the top of the air filter bowl. Replace it if it has cracks or other damage.
4. If you use an external air filtration system, clean or replace any parts in it that are possibly dirty.

Common cutting and gouging problems

Cutting problems

Problem	Solution
Pulling the torch trigger does not fire an arc. Instead, the torch puts out short puffs of air, and the plasma power supply sounds like it is releasing pressure.	▪ The first time that you pull the torch trigger after you set the torch-lock switch to the "ready to fire" (✓) position, multiple puffs of air quickly come from the torch. With each puff of air, the plasma power supply makes a pressure-release sound. This is a warning that occurs when you lock and then unlock the torch. **This does not identify a fault condition.** The purpose of the warning is to tell you that the torch is unlocked and will fire a plasma arc the next time that you pull the trigger. Refer to page 52.
The plasma arc sputters or hisses, or you lose the plasma arc.	▪ Make sure that the Hypertherm cartridge is installed correctly. ▪ Examine the Hypertherm cartridge. Replace it if it is worn or damaged. Refer to Signs that a cartridge is near end-of-life on page 74 and Cartridge maintenance on page 118. ▪ Examine the gas filtration system for signs of moisture. Refer to page 121.
Cartridge life is shorter than expected.	▪ Examine the gas pressure and the gas supply hose. ▪ Examine the gas filtration system for signs of moisture. ▪ Refer to Get the most out of your cartridges on page 73.
The plasma arc does not transfer to the workpiece.	▪ Clean the area where the work clamp touches the workpiece. Remove any rust, paint, or other material. Make sure that there is good metal-to-metal contact. ▪ Examine the work clamp for damage. Repair or replace it if necessary. ▪ Move the torch closer to the workpiece and fire the torch again. Refer to Cut and Mark with the Hand Torch on page 63. ▪ Examine the work lead for signs of damage. Replace it if necessary. Refer to the *Powermax45/65/85/105 SYNC Parts Guide* (810490).
The plasma arc goes out but ignites when you pull the torch trigger again.	▪ Decrease the length of the arc stretch. Whenever possible, drag the torch on the workpiece. Refer to page 68. ▪ Examine the Hypertherm cartridge. Replace it if it is worn or damaged. Refer to Signs that a cartridge is near end-of-life on page 74 and Cartridge maintenance on page 118. ▪ Make sure that the incoming gas supply hose has an internal diameter of 9.5 mm (3/8 inch) or greater. ▪ Examine the gas filtration system for contamination that is possibly interfering with plasma power supply performance. Refer to page 119. ▪ If you manually adjusted the gas pressure before this problem occurred, set the gas pressure back to the default setting. Refer to page 60.

Problem	Solution
The torch does not cut fully through the workpiece.	▪ Examine the Hypertherm cartridge. Replace it if it is worn or damaged. Refer to Signs that a cartridge is near end-of-life on page 74 and Cartridge maintenance on page 118. ▪ Decrease your cut speed. ▪ Make sure that the torch is being used correctly. Refer to Cut and Mark with the Hand Torch on page 63. ▪ Increase the output current (A) on the plasma power supply. Refer to page 58. ▪ If the output current (A) cannot be increased, make sure that the thickness of the metal being cut is less than the maximum capacity for the plasma power supply. Refer to Cutting specifications on page 25. ▪ Clean the area where the work clamp touches the workpiece. Remove any rust, paint, or other material. Make sure that there is good metal-to-metal contact. ▪ Examine the torch lead. Make it straight if it is twisted or kinked. Replace it if it is damaged. ▪ Examine the gas pressure and the gas supply hose. Refer to page 91. ▪ Adjust the gas flow rate.

Gouging problems

When gouging, always make sure of the following:

- A Hypertherm gouging cartridge is installed.
- The Hypertherm cartridge is not worn or damaged. Refer to Signs that a cartridge is near end-of-life on page 74.
- The operating mode is set to Gouge mode.

Problem	Solution
The arc goes out during gouging.	▪ Decrease the arc stretch (standoff). ▪ Put the torch in a more upright position.
The torch tip hits the molten metal (slag).	▪ Increase the arc stretch (standoff). ▪ Keep the torch tip pointed in the direction of the gouge that you want to make.
The gouge has too much depth.	▪ Tilt the torch down so that it is closer to the workpiece. ▪ Increase the arc stretch (standoff). ▪ Increase the gouging speed. ▪ Decrease the output current (A). Refer to Guidelines for hand torch gouging on page 82.
The gouge does not have enough depth.	▪ Put the torch in a more upright position. ▪ Decrease the arc stretch (standoff). ▪ Decrease the gouging speed. ▪ Increase the output current (A). Refer to Guidelines for hand torch gouging on page 82.

Problem	Solution
The gouge has too much width.	▪ Put the torch in a more upright position. ▪ Decrease the arc stretch (standoff). ▪ Increase the gouging speed. ▪ Decrease the output current (A). Refer to Guidelines for hand torch gouging on page 82.
The gouge does not have enough width.	▪ Tilt the torch down so that it is closer to the workpiece. ▪ Increase the arc stretch (standoff). ▪ Decrease the gouging speed. ▪ Increase output current (A). Refer to Guidelines for hand torch gouging on page 82.

Fault icons and fault codes

The Powermax45 SYNC power supply shows faults using a combination of fault icons and fault code numbers. Some faults are shown by the icons only, others are shown by the icons and a fault code number.

Sometimes the icons do not indicate a fault condition. If the Cut Mode icon or the Gouge Mode icons flash, this indicates that the gas pressure has been manually adjusted. When you reset the gas pressure to its default setting, the icons stop flashing. Refer to page 60.

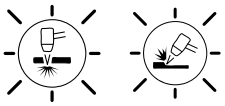

Fault icons

Service

This icon is used by qualified service technicians for troubleshooting the Powermax power supply.

Temperature

This icon identifies fault conditions in which the plasma power supply is outside the range of permitted operating temperatures.

Torch Cap sensor

This icon identifies fault conditions in which the Hypertherm cartridge is loose, incorrectly installed, or missing.

This icon also identifies when the SmartSYNC torch is in the yellow lock (**X**) position.

Fault

This icon identifies faults that cause the plasma power supply to stop cutting.

This icon also comes on when the torch is set to the yellow lock (X) position. Refer to Controls and indicators on the hand torch on page 57.

Gas

This icon identifies fault conditions in which the gas supply is disconnected from the plasma power supply or there is a problem with the gas supply.

Power ON

When flashing, this icon identifies a problem with the alternating current (AC) input power. Refer to Remove fault code conditions on page 98.

Fault codes

When a fault occurs with the plasma power supply or the torch, a fault icon ❶, or a fault icon and a fault code ❷, will show on the 2-digit display:

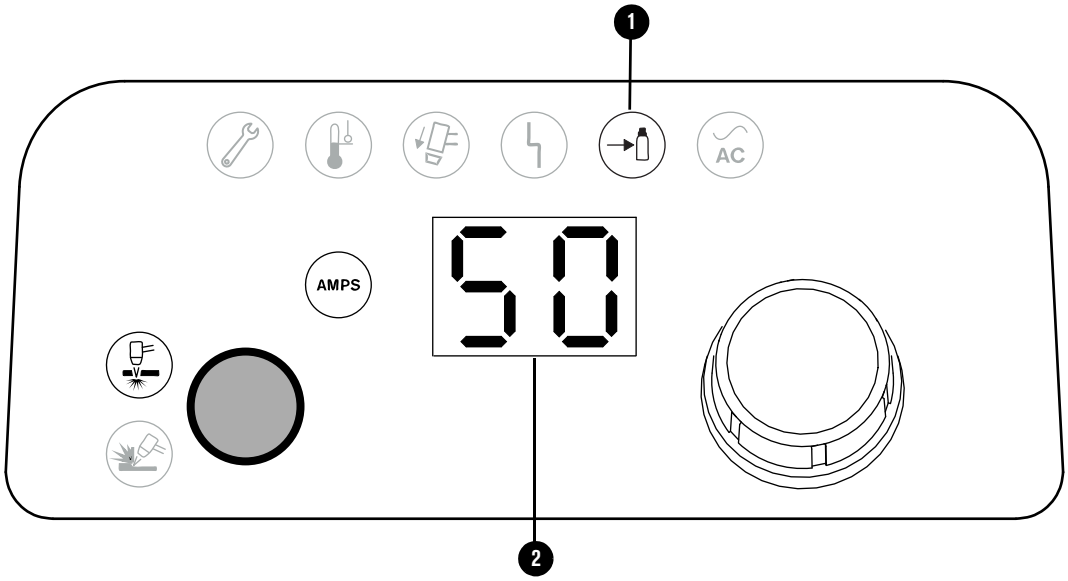

Fault codes give additional information when necessary to make the source of the problem easier to identify.

Fault codes are divided into three segments (*N-nn-n*), and each segment shows on the 2-digit display in sequence. This is an example of the 0-50-2 fault code:

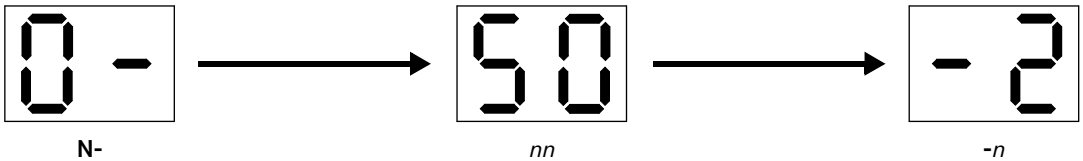

The status LED on the SmartSYNC hand torch also shows the fault status.

Yellow = a 0-*nn-n* fault code, or the torch is locked

Red = a 0-32-0, 1-*nn-n*, 2-*nn-n*, or 3-*nn-n* fault code

Remove fault code conditions

Refer to the following table to identify and troubleshoot each fault condition.

A label with descriptions for many common fault codes is included with the system. Put the label on the plasma power supply or near your work area for reference.

Operational faults

An operational fault code can be for a notification or for a condition that stops the cutting process. Hypertherm recommends that you do the steps in the following table for all faults that occur. Troubleshooting all faults helps you to get optimal cut quality and consumable life.

Fault code	Fault LEDs	Torch LEDs	Description	Solutions
None	AC OFF		The ON/OFF power switch is set to ON (**I**), but the Power ON LED does not illuminate.	▪ Make sure that the power cord is plugged into the receptacle. ▪ Make sure that the power is on at the main power panel or at the disconnect-power switch box. ▪ Make sure the system is plugged into an appropriately-sized circuit and that the circuit breaker has not been tripped. Refer to page 30.
None	AC Flashes Quickly	Flashes yellow	The alternating current (AC) input power is not stable.	This fault stops the system from operating. In some conditions, the system can operate at a decreased capacity. ▪ Do a cold restart. Refer to page 90. ▪ If applicable, disconnect the system from generator power. ▪ If you continue to get this fault, have an electrical technician correct the power source.

Fault code	Fault LEDs	Torch LEDs	Description	Solutions
None	ON ON AC ON	Yellow	The gas pressure is lower than the minimum pressure for the selected process, operating mode, torch, lead length, or Hypertherm cartridge type.	This fault code does not stop the system from operating. Do the following. ▪ Examine all the connections for the input gas supply. Make sure that there are no leaks or loose connections. ▪ Make sure that the incoming gas supply hose has an internal diameter of 10 mm (3/8 inch) or greater if the hose is less than 15 m (50 feet). For hoses that are 15 m – 30 m (50 feet – 100 feet), use an internal diameter of 13 mm (1/2 inch) or greater. ▪ Make sure that there is sufficient inlet gas pressure from the gas supply source. Refer to page 40. ▪ Manually adjust the gas pressure on the plasma power supply. Refer to page 57. ▪ Do a gas test to see if the plasma power supply's actual output is too low. Refer to page 109. ▪ If you do not see a problem with the inlet gas supply, examine the air filter bowl and air filter element in the plasma power supply. Clean or replace as necessary. Refer to page 119. ▪ If you continue to get this fault condition, have an authorized service technician examine the system. Speak to your distributor or authorized repair facility.
None	Flashes quickly AC ON	Yellow	There is no gas supply input.	This fault code stops the system from operating. The fault code goes away when you connect the gas supply to the plasma power supply unless there is a blockage in the gas line. Do the following. ▪ Make sure that the input gas supply is connected correctly to the plasma power supply. ▪ Examine all the connections for the input gas supply. Make sure that there are no blockages in the gas line. Make sure that there are no leaks or loose connections. ▪ Set the power switch on the plasma power supply to OFF (**O**), and then set the power switch to ON (**I**).

Fault code	Fault LEDs	Torch LEDs	Description	Solutions
None	Flashes slowly AC ON	Yellow	There is a torch stuck open (TSO) condition. The nozzle and electrode components inside the Hypertherm cartridge are not touching after a Start signal is received.	These fault codes stop the torch from firing a plasma arc. In some conditions, you can fire the torch again and continue to cut. **If the fault occurred when you first installed the cartridge and tried to fire the torch, do the following:** ▪ If the Hypertherm cartridge became loose or was removed while the plasma power supply was ON and the torch-lock switch was set to the green "ready to fire" position (✓), set the power switch on the plasma power supply to OFF (**O**), correct the problem, and set the power switch to ON (**I**) to remove the fault. ▪ Examine the Hypertherm cartridge. Make sure that it is not worn or damaged. Refer to Signs that a cartridge is near end-of-life on page 74 and Cartridge maintenance on page 118. ▪ **Hand torch:** Move the torch-lock switch to the yellow lock (**X**) position, then move the torch-lock switch to the green "ready to fire" (✓) position. Fire the torch 1 time to get the warning puffs of air. This can clean away unwanted material that has collected around the tip of the cartridge. ▪ Remove the cartridge and carefully shake it to remove unwanted material that has collected inside the cartridge. ▪ Install a new Hypertherm cartridge. **If the fault occurred during postflow or during a cut, do the following:** ▪ Examine the gas line. Refer to Examine the gas pressure on page 91 and Examine the gas quality on page 92. ▪ Examine the torch for damage and for conditions that can prevent correct gas flow. Refer to Troubleshoot torch stuck open (TSO) fault codes that occur during postflow on page 112.
None	Flashes quickly AC ON		There is a torch stuck closed (TSC) condition. The nozzle and electrode components inside the Hypertherm cartridge will not disconnect from each other after a Start signal is received.	

Fault code	Fault LEDs	Torch LEDs	Description	Solutions
None	ON AC ON	Yellow	Power supply internal temperature is too hot or too cold.	You can continue to use the system when its internal temperature is no longer too hot or too cold. Hypertherm recommends that you operate the system only in external temperatures between -10°C to 40°C (14°F to 104°F). ▪ Keep the plasma power supply ON to let the fan decrease the temperature of the internal components. Refer to Prevent overheating on page 61. ▪ Make sure that there is sufficient air flow around the plasma power supply. ▪ Make sure that the plasma power supply cover is installed with the louvers in front of the fan. ▪ If the internal temperature of the plasma power supply gets near -30°C (-22°F), move the system to a warmer location.
None	ON AC ON	Yellow	Torch not ready.	This fault code stops the system from operating. ▪ This fault shows when you do a restart while the torch-lock switch is in the yellow lock (**X**) position. Move the torch-lock switch to the green “ready to fire” (✓) position to continue. ▪ This fault also shows if the torch is disconnected when you set the plasma power supply to ON (**I**). Connect the torch to the plasma power supply. Do a quick restart (refer to page 90). ▪ This fault also shows when a cartridge is not installed correctly. Remove the Hypertherm cartridge and install it correctly. ▪ If the Hypertherm cartridge is in good condition and is installed correctly, the torch has possible damage. Speak to your distributor or authorized repair facility.

Fault code	Fault LEDs	Torch LEDs	Description	Solutions
None	Flashes one after the other On	Yellow	The plasma power supply was receiving a signal to start cutting at the same time that the power switch was set to ON (**I**).	This fault code stops the system from operating. Do the following. ▪ The torch trigger was being held in the “fire” position when the power switch on the plasma power supply was set to ON (**I**). Release the trigger and do a quick restart of the plasma power supply. Refer to page 90.
None	On Flashes	Yellow	An AC input voltage phase loss occurred. This is applicable only to 3-phase models.	This fault code stops the system from operating. ▪ Have an electrical technician examine all input phases and fuses/breakers for correct voltage at the power source and at the plasma power supply. ▪ If applicable, disconnect the system from generator power. ▪ Do a cold restart. Refer to page 90.

Fault code	Fault LEDs	Torch LEDs	Description	Solutions
0-11-0	AC ON	CNC use only	The remote control operating mode is incorrect or not permitted for the installed cartridge. The permitted operating modes for cutting cartridges are 1 (Cut mode). The permitted operating mode for a gouging cartridge is 2 (Gouge mode).	These fault codes only apply to remotely controlled plasma power supplies. They do not stop the system from operating. There is a problem with the remote control or the software interface to the system. The system cannot interpret the operating mode, output current, or gas pressure information coming from the controller. ▪ Examine the programming code for incorrect process variables. ▪ Repair the controller.
0-11-1	AC ON		The remote control output current (A) is incorrect or not permitted for the installed cartridge. The permitted values relate to the minimum and maximum output current (A) for the plasma power supply and the installed cartridge.	
0-11-2	AC ON		The remote control gas pressure is incorrect or not permitted. The permitted gas pressure relates to the selected process and operating mode, and to the installed torch, torch lead, and cartridge.	

Fault code	Fault LEDs	Torch LEDs	Description	Solutions
0-12-1	AC ON	CNC use only	The gas pressure output is low.	These fault codes do not stop the system from operating. ▪ For **0-12-1** faults, increase the inlet gas pressure from the gas supply source. For optimum system performance, make sure that the inlet gas pressure stays between 7.6 bar – 8.3 bar (110 psi – 120 psi) while gas is flowing. For minimum inlet pressure specifications, refer to page 40. ▪ **Never exceed the maximum gas pressure of 9.3 bar (135 psi)**. ▪ Make sure that none of the gas lines are kinked or blocked. ▪ Do a gas test to see if the plasma power supply's actual output gas pressure is lower than the set pressure by more than an acceptable quantity. Refer to page 109 ▪ Have a qualified service technician examine the solenoid valve inside the plasma power supply. Speak to your distributor or authorized repair facility.
0-12-2			The gas pressure output is high.	
0-12-3			The gas pressure output is not stable.	
0-14-0	ON AC ON	Flashes yellow	There is a problem with the cartridge installation.	This fault shows when you install a cartridge, and it cannot send data to the plasma power supply. This fault code stops the system from operating. ▪ Set the torch-lock switch to the yellow lock (**X**) position and then back to the green "ready to fire" (✔) position. ▪ Do a quick restart. ▪ Install the cartridge again. Electrical noise can cause a bad data connection. For example, high frequency electrical noise from TIG welders can cause interference. Keep electrical noise in the work area as low as possible. To prevent possible damage to the workpiece and cartridge, the system automatically: ▪ Sets the output current to 45 A. ▪ Sets the operating mode to Cut mode. ▪ Sets the output gas pressure to cut pressure. If necessary, you can manually change these settings to cut without a data connection.

Fault code	Fault LEDs	Torch LEDs	Description	Solutions
0-14-1	AC ON	Flashes yellow	The cartridge is not recognized.	This fault shows when a cartridge cannot send data to the plasma power supply for some reason. This fault code does not stop the system from operating. ▪ When this fault occurs, you can continue to cut or gouge, but **you must set the output current (A) and the operating mode manually**. ▪ Lightly blow air into the cartridge to remove all dust or other contamination. Install the cartridge again. ▪ Make sure that the green ring inside the cartridge is not broken.
0-40-5	ON AC ON	Yellow	Duty cycle exceeded.	This fault code stops the system from operating. Do the following: ▪ Wait 4 minutes for the plasma power supply to cool. Refer to Prevent overheating on page 61. ▪ Reduce the power supply current setting or reduce the torch on time to keep within the system's rated duty cycle.
0-50-1	ON AC ON	Yellow	The torch-lock switch is set to the yellow lock (**X**) position.	This fault code stops the system from operating. Do the following. A restart is not necessary. ▪ **Hand torch:** Move the torch-lock switch to the green "ready to fire" (✓) position. Fire the torch 1 time to get the warning puffs of air. Fire the torch again to get a plasma arc. ▪ **Machine torch:** Move the torch-lock switch to the green "ready to fire" (✓) position. Fire the torch to get a plasma arc. ▪ **Mini machine torch:** This fault code is not applicable to the mini machine torch.

Fault code	Fault LEDs	Torch LEDs	Description	Solutions
0-50-2	ON AC ON	Yellow	The torch-lock switch is set to the green “ready to fire” (✓) position, but the torch is not prepared to fire.	This fault code identifies a condition in which an additional step is necessary *for hand torches* before the hand torch will fire a plasma arc. ▪ When you move the torch-lock switch to the green “ready to fire” (✓) position, the fault code changes from 0-50-1 to 0-50-2, and the icon goes off. ▪ **Hand torch:** Fire the torch 1 time to get the warning puffs of air. The 0-50-2 fault code goes off, and the LED on the hand torch changes from yellow to green. The torch is now prepared to fire a plasma arc. ▪ **Machine torch:** The 0-50-2 fault code shows for approximately 1 second and then goes off. Fire the torch to get a plasma arc. There are no warning puffs of air. If the 0-50-2 fault code does not go off, send a STOP signal from the CNC to remove the fault. ▪ **Mini machine torch:** This fault code is not applicable to the mini machine torch.
0-50-3	AC ON	Yellow	The system is reading data from the cartridge.	This fault code flashes quickly while the system reads configuration data from the cartridge. Wait for the fault code to go away on its own. ▪ **The system will not cut until the fault code goes away.** ▪ This fault code can show for up to 6 seconds if electrical noise causes interference with the data connection. ▪ If the system cannot read the data from the cartridge, a different fault code will show. ▪ **Hand Torch:** The usual behavior is to see a 0-50-2 fault code after 0-50-3 goes away. Fire the torch 1 time to get the warning puffs of air. The 0-50-2 fault code goes away. The torch is now prepared to fire a plasma arc.

Fault code	Fault LEDs	Torch LEDs	Description	Solutions
0-52-0	ON ON ON	None	The torch is not connected.	This fault code stops the system from operating. Do the following. A quick restart is necessary. ▪ Make sure that the torch lead is correctly connected to the FastConnect receptacle on the front of the plasma power supply. Do a quick restart. ▪ If you disconnect the torch while the plasma power supply is set to ON (**I**), you get the 0-52-0 fault code. ▪ If you disconnect the torch while the plasma power supply is set to OFF (**O**), you get the 0-50-0 fault code the next time you set the plasma power supply to ON (**I**).
0-98-1	ON ON	Yellow	An radio frequency (RF) communication failure occurred between the cartridge and the torch. When this fault occurs, the Hypertherm cartridge is not sending data to the system, so the system cannot collect data about the cartridge. The problem can be with the Hypertherm cartridge or with the SmartSYNC torch.	This fault code does not stop the system from operating. You can continue to cut or gouge, but **you must set the output current (A) and the operating mode manually**. **Cartridge:** ▪ Make sure that the Hypertherm cartridge is installed correctly. ▪ Make sure that the green ring inside the cartridge is not broken. ▪ If you have a Hypertherm cartridge reader (528083), do a test to identify if the reader can pull data from the cartridge. ▪ Install a new Hypertherm cartridge. **Torch:** ▪ If a new Hypertherm cartridge does not remove the fault condition, a component in the SmartSYNC torch has possible damage. A qualified service technician must examine the torch. Speak to your distributor or authorized repair facility.

Fault code	Fault LEDs	Torch LEDs	Description	Solutions
0-98-2	ON AC ON	Flashes yellow	A communication failure occurred between the torch and the plasma power supply.	This fault code does not stop the system from operating. When this fault occurs, the SmartSYNC torch is not sending data to the plasma power supply. The problem can be with the torch or with the plasma power supply. A qualified service technician must identify the source of the fault and repair the component that is damaged. Speak to your distributor or authorized repair facility. You can continue to cut or gouge, but **you must set the output current (A) and the operating mode manually**.

Internal component faults (1-*nn-n*, 2-*nn-n*, 3-*nn-n*)

Fault codes in the 1-*nn-n*, 2-*nn-n*, and 3-*nn-n* formats identify possible damage to components inside the plasma power supply.

Fault code	Fault icon	Fault LEDs	Description	Solutions
1-*nn-n* **2-*nn-n*** **3-*nn-n***	ON AC ON	Red	A major fault occurred.	These fault codes stop the system from operating. Do the following. ▪ Do a cold restart. In some conditions, a restart can remove the fault condition. ▪ If restarting the plasma power supply does not remove the fault condition, a qualified service technician must repair the system. Speak to your distributor or authorized repair facility.

Do a gas test

Use a gas test to see if sufficient gas pressure is exiting the torch. The gas test lets you see the plasma system's actual gas pressure so that you can compare it to the inlet set pressure.

CAUTION

Point the torch away from you before doing a gas test. Always keep hands, clothes, and objects clear of the torch tip. Never point the torch toward yourself or others.

Enter gas test mode

1. Make sure the correct mode is selected for the process you want to validate (Cut or Gouge).
2. Press-and-hold the Mode button ❶ for approximately 5 seconds.
3. Release the **Mode** button when the 2-digit display shows ***P.C.***

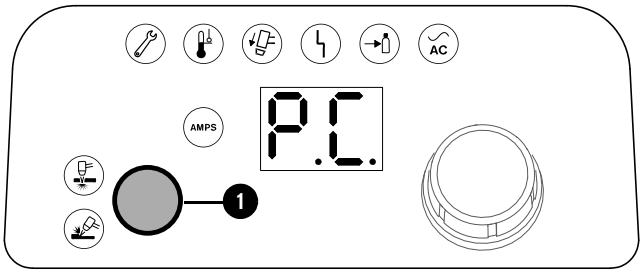

P.C. indicates pressure check.

4. The set pressure ❶ flashes on the 2-digit display before the actual output gas pressure ❷ shows. Make note of the set pressure so that you can compare it to the actual pressure.

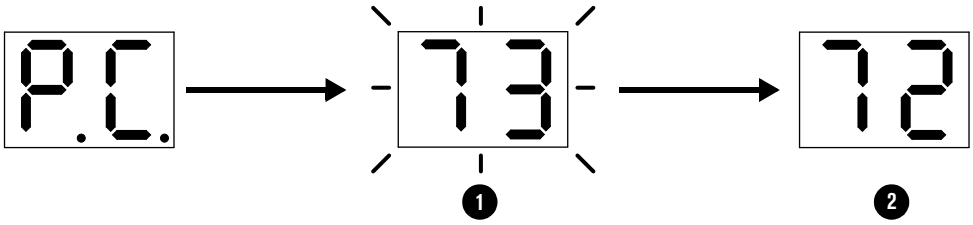

If the 2-digit display shows “0.0” (bar) or “00” (psi) when you enter gas test mode, the torch is not in a “ready to fire” state. In this case, pull the trigger. The system then emits the warning puffs of air (refer to page 52) and displays the actual pressure.

While gas test mode is active

- Air flows continuously from the torch tip ❶.
- The 2-digit display shows the output gas pressure ❷.
- The AMPS LED ❸ remains off.

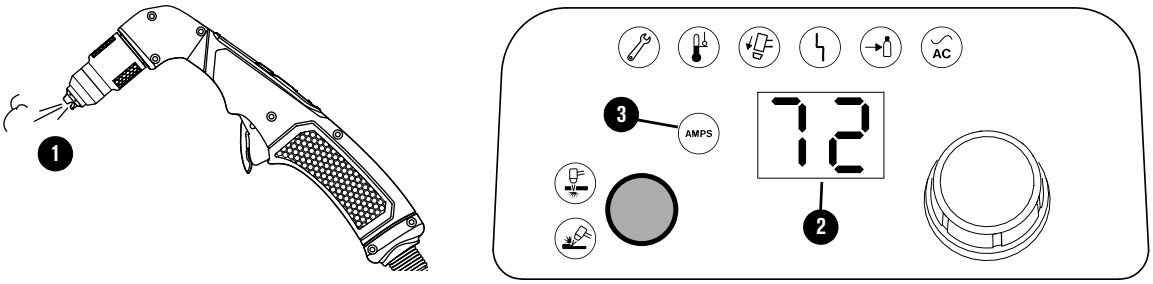

Exit gas test mode

You can do one of the two actions below to exit gas test mode:

- Press the Mode ❶ button.
- Turn the adjustment knob ❷.

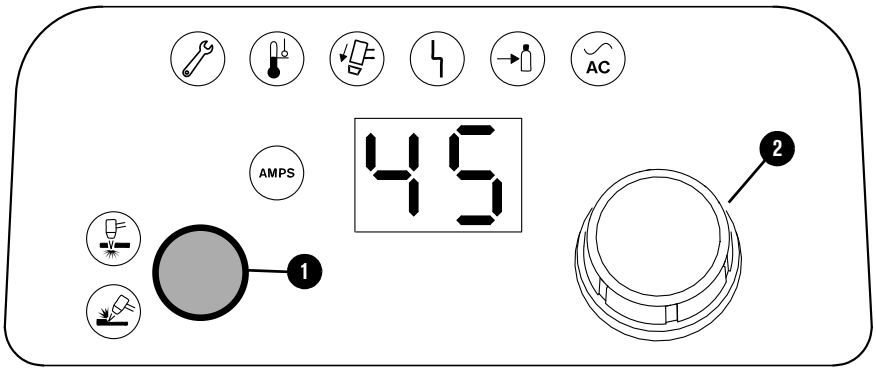

After the system exits gas test mode:

- The 2-digit display shows the cutting current (amperage).
- The AMPS LED illuminates.

Troubleshoot torch stuck open (TSO) fault codes that occur during postflow

A start signal during postflow causes the remaining air pressure in the torch lead to quickly decrease. If the pressure does not decrease quickly enough, the electrode may not go back to its closed position in time to make the pilot arc. A torch stuck open error occurs.

If you try to fire the torch during postflow and get a torch stuck open error, do the these steps. **After each step, try to fire the torch again**.

1. Reset the torch.
   - Move the torch lock switch to the LOCK position and then back to the “ready to fire” position.
2. Try a different cartridge. Refer to Step 4 – Install the cartridge on page 48.
3. Do an inspection of the torch lead.
   - Does the torch lead have any kinks or bends? Do not bend the torch lead around a radius that is less than the minimum bend radius of 76 mm (3.0 inches).
   - Are there cable ties around the torch lead that are too tight?
   - Are there any signs of a gas leak?

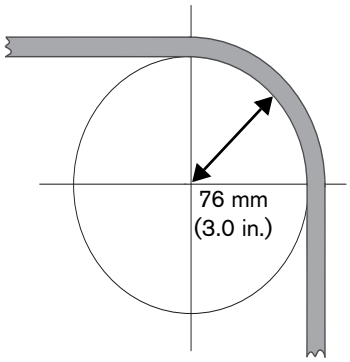

4. Do a gas pressure test.
   - Refer to Do a gas test on page 109.
   - Refer to Inlet gas pressure requirements (while gas is flowing) on page 40.
5. Try a different torch.
   - If the torch does not fire, there could be a problem with the plasma power supply instead of the torch. Speak to your distributor or authorized repair facility.

Troubleshoot power-related problems with generators

- Problems with input line voltage (AC LED flashes) can occur more frequently with some generators. If a fault occurs while you are using a generator, it is possible that doing a quick restart does not remove the fault condition. Instead, set the power switch on the plasma power supply to OFF (**O**) and wait approximately 1 minute before setting the power switch to ON (**I**).
- If you continue to have problems with input line voltage, disconnect the plasma power supply from the generator, and connect it to a power receptacle with sufficient power.
  - Refer to page 36 for generator specifications.

7 Complete Regular Maintenance Tasks

Examine the plasma power supply and torch

⚠ WARNING

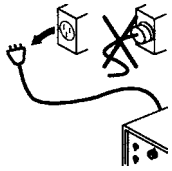

ELECTRIC SHOCK CAN KILL

Disconnect electric power before doing installation or maintenance. You can get a serious electric shock if electric power is not disconnected. Electric shock can seriously injure or kill you.

All work that requires removal of the plasma power supply outer cover or panels must be done by a qualified technician.

Refer to the *Safety and Compliance Manual* (80669C) for more safety information.

⚠ WARNING

RISK OF BURNS AND ELECTRIC SHOCK – USE INSULATED GLOVES

Always put on insulated gloves when changing the cartridges. The cartridges get very hot during cutting and can cause severe burns.

Touching the cartridges can also cause electric shock if the plasma power supply is ON and the torch-lock switch is not in the yellow lock (**X**) position.

⚠ WARNING

INSTANT-ON TORCHES – PLASMA ARC CAN CAUSE INJURY, BURNS

Ignition of the plasma arc occurs immediately when you pull the torch trigger. Before changing the cartridge, one of the following steps is necessary. Whenever possible, complete the first step.

- Set the power switch on the plasma power supply to OFF (**O**).

  OR

- Move the torch-lock switch to the yellow lock (**X**) position. Pull the trigger to make sure that the torch does not fire a plasma arc.

Each use

Plasma power supply	Torch
1 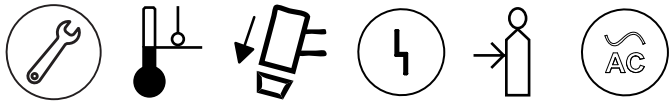 Examine the indicator LEDs and correct any fault conditions. Refer to Fault icons and fault codes on page 96.	3 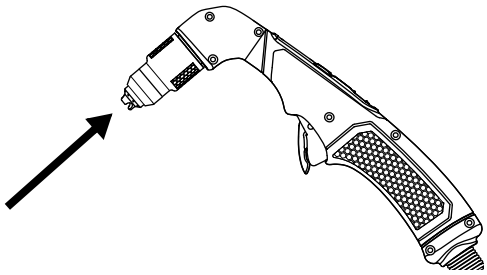 Examine the cartridge for correct installation and for wear. Refer to Signs that a cartridge is near end-of-life on page 74 and Cartridge maintenance on page 118.
2 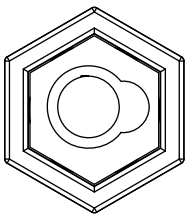 To prevent overheating, do the following: ▪ Examine the work lead connector to make sure that it is fully connected to the plasma power supply and is not loose. Make sure that you turn the connector clockwise approximately 1/4 turn until the connector is fully engaged and locked in position. ▪ Do a check of the plug on the work lead. When a plug is replaced, damage to the wire inside the plug can occur. If the plug on the work lead has been replaced, look for damage.	

With each cartridge change or each week (whichever is more frequent)

Torch	
Do a test of the torch-lock switch to make sure that it correctly locks and unlocks the torch. Lock the torch ❶: ▪ With the plasma power supply ON, move the torch-lock switch to the **yellow** lock (**X**) position. ▪ Point the torch away from yourself and others. ▪ Pull the trigger to make sure that the torch does not fire. Unlock the torch ❷: ▪ Move the torch-lock switch to the **green** "ready to fire" (✔) position. ▪ Point the torch away from yourself and others. ▪ Pull the trigger 1 time. Make sure that the torch does not fire. Make sure that multiple puffs of air quickly come from the torch instead. Refer to Warning puffs of air on page 52. Have a qualified service technician replace the torch-lock switch if it is not working correctly. Speak to your distributor or authorized repair facility.	❶ 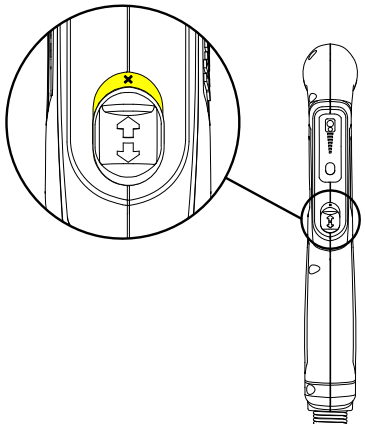 ❷ 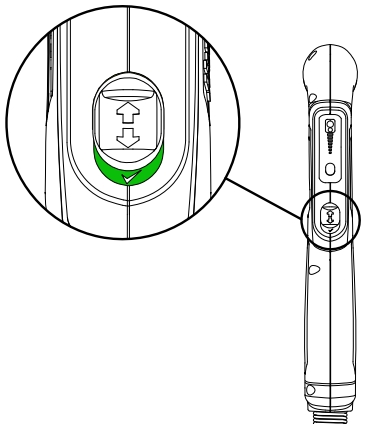

At 3 month intervals

Plasma power supply	Torch
1 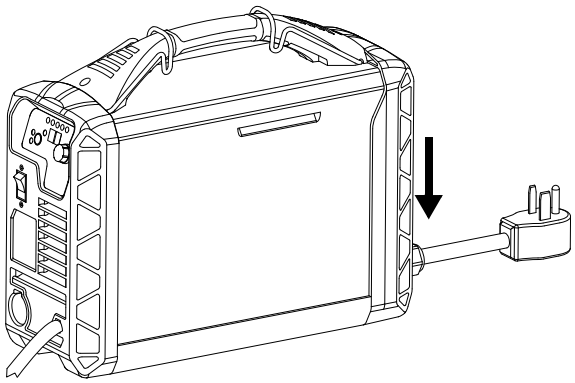 Examine the power cord and plug. Replace them if they are damaged. Refer to the *Powermax45/65/85/105 SYNC Parts Guide* (810490).	3 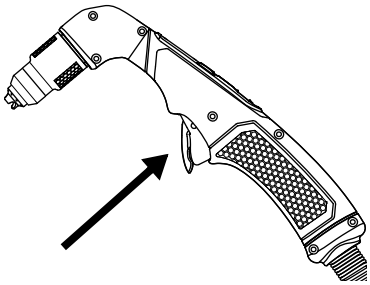 Examine the trigger for damage. Examine the torch body for cracks and exposed wires. Have a qualified service technician replace any damaged parts. Speak to your distributor or authorized repair facility.
2 Examine the labels. Replace any damaged labels. Refer to the *Powermax45/65/85/105 SYNC Parts Guide* (810490).	4 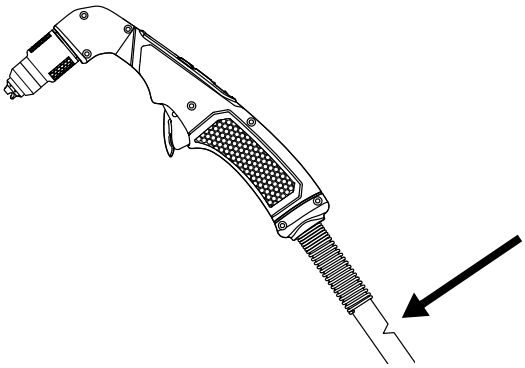 Examine the torch lead. Have a qualified service technician replace it if it is damaged. Speak to your distributor or authorized repair facility.

Cartridge maintenance

To help keep a cartridge operating correctly, do the following. For information on cartridge life, refer to Signs that a cartridge is near end-of-life on page 74.

- Carefully remove molten metal that collects in the castellations of drag-cutting cartridges. **Do not push the unwanted material inside the nozzle or shield.**
- Carefully remove molten metal that causes a blockage of the airflow holes in the shield. **Do not push the unwanted material inside the nozzle or shield.**
- Examine the O-ring on the torch body. If the O-ring is cracked or worn, replace it. If the O-ring is dry, or if it is not easy to install the cartridge, apply a thin layer of silicone lubricant on the O-ring and the threads. Make sure that the O-ring is shiny, but do not apply too much lubricant.

Figure 3 – Components to examine

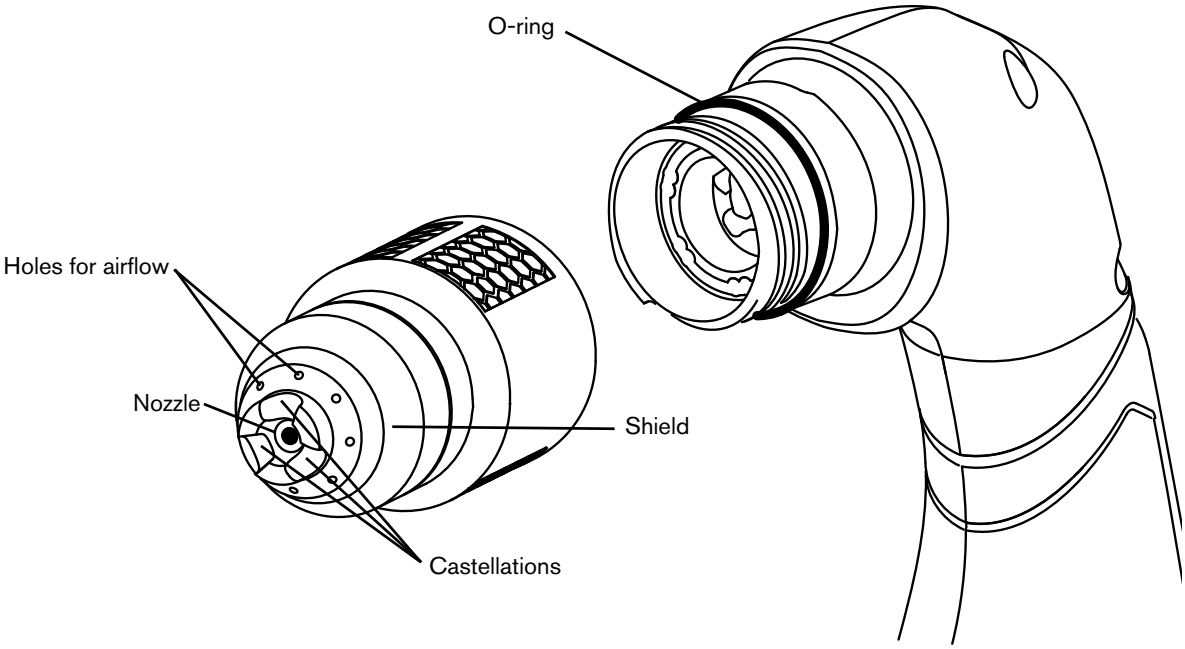

Examine the air filter bowl and filter element

It is extremely important to keep a clean, dry gas line to do the following:

- Prevent oil, water, dirt, and other contaminants from causing damage to internal components.
- Get the best possible cut quality and consumable life.

Drain water from the bowl (if necessary)

A small amount of water can collect in the bottom of the filter bowl. The filter bowl automatically removes the water when enough water collects to engage the float mechanism inside the bowl.

To manually drain water from the bowl, remove the nut at the bottom of the bowl with your hand.

To prevent damage to the plastic nut, do not use a wrench or other tool.

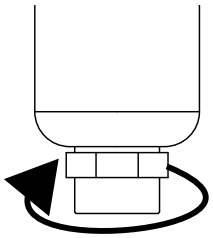

Unscrew nut to remove

Remove the air filter bowl and filter element

1. Set the power switch on the plasma power supply to OFF (**O**).
2. Disconnect the power cord from the electrical power.
3. Disconnect the gas supply from the rear of the plasma power supply.
4. Remove the air filter bowl by unscrewing the metal guard ❶ until it disconnects from the air filter assembly inside the plasma power supply.
5. Remove the air filter bowl ❷ from the metal guard.
6. Gently pry the filter element ❸ out of the filter bowl. Be careful not to damage the O-ring ❹ at the top of the bowl.

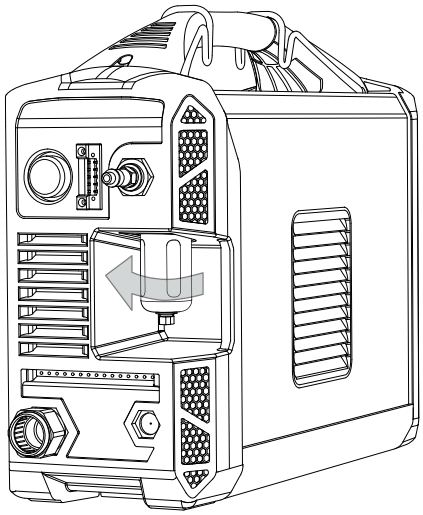

Examine the air filter bowl and O-ring

Example of a dirty air filter bowl

NOTICE

DIRTY, OILY AIR CAN CAUSE DAMAGE TO THE AIR FILTER BOWL

Synthetic lubricants containing esters that are used in some air compressors can cause damage to the polycarbonates in the air filter bowl. Add more gas filtration if necessary.

- Make sure that there is no oil, chemicals, dirt, or other contamination on the filter bowl or O-ring. Contamination can prevent a good seal, causing gas leaks. Contamination can also go through the gas line to the plasma power supply or torch and gradually cause damage to internal components.
- Make sure that the O-ring is not cracked or damaged.
- Clean the air filter bowl by removing any oil, dirt, or other contaminants. Yellow material on the filter bowl often shows that oil is getting into the gas supply line.
- Replace the air filter bowl and O-ring as necessary. Refer to the *Powermax45/65/85/105 SYNC Parts Guide* (810490). Also refer to Replace the air filter bowl, O-ring, and filter element on page 121.
- If you use an external filtration system, such as the Eliminizer filter kit, also do a check of that filter regularly for necessary maintenance or cleaning.

Examine the filter element

- Do a check of the filter element inside the air filter bowl regularly, especially in environments that are very dusty or very warm and humid.
- Replace the filter element when it is dirty or starts to show signs of damage. Refer to the *Powermax45/65/85/105 SYNC Parts Guide* (810490).

Replace the air filter bowl, O-ring, and filter element

1. Twist the plastic fittings ❶ until they come apart, approximately a 1/4 turn. Set the fittings aside.

2. Put the new air filter element ❷ in the plastic fittings. Twist the plastic fittings until they lock together, approximately a 1/4 turn.

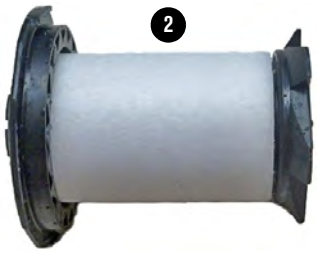

3. Clean the air filter bowl by wiping away any oil, dirt, or other contaminants.

   A yellow residue on the filter bowl often indicates that oil is getting into the gas supply line.

4. Discard the used O-ring ❸, and put the new O-ring at the top of the filter bowl.

5. Put the filter element inside the air filter bowl. Push down on the top plastic fitting until you hear a click.

Install the air filter bowl and filter element

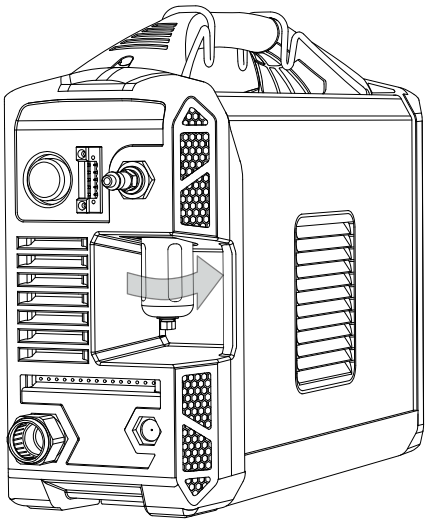

1. Put the air filter bowl back into place by screwing the metal guard into the air filter assembly that is inside the power supply.

   Make sure the air filter bowl and metal guard remain straight as you install them. Otherwise, you may damage the threads on the metal guard.

2. Hand tighten the filter bowl by turning it to the right.
3. Reconnect the gas supply to the rear of the plasma power supply.
4. Reconnect the power cord.